RESOLUTION NO. 2023-18

A RESOLUTION OF THE CITY COUNCIL OF THE CITY OF MARINA APPROVING A LEASE AGREEMENT BETWEEN THE CITY OF MARINA AND DISH WIRELESS, LLC FOR THE CELL SITE LOCATED AT 761 NEESON ROAD, BUILDING 524, AT THE MARINA MUNICIPAL AIRPORT, AUTHORIZING FINANCE DIRECTOR TO MAKE NECESSARY ACCOUNTING AND BUDGETARY ENTRIES, AND AUTHORIZING CITY MANAGER TO EXECUTE THE AMENDMENT TO THE LEASE AGREEMENT ON BEHALF OF THE CITY, SUBJECT TO FINAL REVIEW AND APPROVAL BY CITY ATTORNEY

WHEREAS, in 2000, the City Council approved a lease agreement with Alpine PCS to install a telecommunications tower on the top of Building 524 at the Marina Municipal Airport.

WHEREAS, the Alpine PCS lease had a term of 25 years, consisting of five separate five year extensions. This tower was later abandoned and has been unused for approximately 10-years now; and

WHEREAS, DISH Wireless, LLC has requested to utilize the existing tower and ground equipment to house their telecommunications equipment. The existing space includes a 260 square foot ground lease area that houses the base equipment and airspace above the south end of the Building 524 roof that supports a tower for the antennae array; and

WHEREAS, staff has negotiated a draft lease (**EXHIBIT A)** with the following provisions:

New Base Rent	$2,900.00 per month
New Escalation	2.5 % annually
New Initial Term	60 months (5 years)
# of Renewal Terms	4
Total Term	300 months (25 years)

WHEREAS, anticipated annual rent revenue to the airport will be $34,800 in the first year.

NOW, THEREFORE, BE IT RESOLVED that the City Council of the City of Marina does hereby:

1. Adopt Resolution No. 2023- , approving a Lease Agreement between City of Marina and DISH Wireless, LLC., for the cell site located at 761 Neeson Road, Building 524, at the Marina Municipal Airport; and

2. Authorize Finance Director to make necessary accounting and budgetary entries; and

3. Authorize City Manager to execute the Amendment to the Lease Agreement on behalf of the City, subject to final review and approval by City Attorney.

PASSED AND ADOPTED by the City Council of the City of Marina at a regular meeting duly held on the 22nd day of February 2023, by the following vote:

AYES, COUNCIL MEMBERS: Visscher, McCarthy, Biala, Medina Dirksen, Delgado
NOES, COUNCIL MEMBERS: None
ABSENT, COUNCIL MEMBERS: None
ABSTAIN, COUNCIL MEMBERS: None

_____
Bruce C. Delgado, Mayor

ATTEST:

_____
Anita Sharp, Deputy City Clerk

LEASE AGREEMENT

THIS LEASE (the "Lease"), made and entered into this ____day of_____, 2022 ("**Effective Date**") by and between the **CITY OF MARINA**, a California municipal corporation ("City"), and **DISH WIRELESS L.L.C.**, a Colorado limited liability company ("Tenant" or "Dish"), as follows:

Recitals:

This Lease is entered into with reference to the following facts and circumstances, which are hereby found and determined by the parties:

A. City owns and operates the Marina Municipal Airport (the "Airport") located in the City of Marina. The Airport was formerly known and operated by the U.S. Army as Fritzsche Airfield and was part of the Fort Ord Military Reservation.

B. City owns or controls certain real property legally described in **Exhibit "A"** commonly known as Building 524 (the "Building" or "Building 524"), Airport (031-111-026-000) located at 761 Neeson Road, in the County of Monterey, State of California (collectively, the "Property").

C. The Property is improved with an abandoned Existing Communications Facility, comprised of an approximately 225 square foot communication ground equipment area located on the southern end of the west elevation of the Building and a communications antennae that extends approximately 19 feet atop the existing 58 foot tall Building.

D. Tenant desires to use a portion of the Property in connection with its federally licensed communications business. City desires to grant to Tenant the right to use a portion of the Property in accordance with this Lease. A portion of Building 524 is also leased to Joby Aviation. The final portion of the Building 524 is used by the Airport as a pilot's lounge.

E. This Lease pertains to minor alterations an existing public structure, and as such, this Lease is categorically exempt from the California Environmental Quality Act (CEQA) in accordance with CEQA Categorical Exemption 15301, Existing Facility.

F. It is mutually agreed that this Lease is upon and subject to the following contingency, terms, covenants, conditions and provisions and Tenant covenants, as a material part of the consideration of this Lease, to keep, perform and comply with each and all of said terms, covenants, conditions and provisions to be kept, performed and complied with, and this Lease is made upon the condition of such performance and compliance.

Terms and Conditions

ARTICLE 1. LEASE OF PREMISES, EASEMENT AND RESERVATION, TERM

1.01 **Leased Premises**. City hereby leases to Tenant, and Tenant hereby leases from City a portion of the Property, ""consisting of (a) ground area space of approximately 260 square feet, (b) air

space directly above the ground lease area up to a height of 25 feet above grade, and (c) space on the roof top antenna structure located on the south elevation of the Building, with such easements as are necessary for the placement of additional antennas ("Tenant's Facilities") and initial installation as described on attached **Exhibit "B"** (collectively, the "Premises") in accordance with the terms of this Lease.

The foregoing rights shall terminate simultaneously on expiration or sooner termination of this Lease.

1.02 **Easement and Reservation**. The following easement, as depicted on Exhibit "A"), and reservation is hereby reserved by City, described generally as follows: the hangar apron area directly south of the hangar doors of the structure extending from the west extent of the structure to the east extent of the structure, and extending approximately 60-linear feet south of the hangar doors.

(a) Tenant shall have the right (but not the obligation) at any time following the full execution of this Lease and prior to the Commencement Date, to enter the Premises for the purpose of making necessary inspections and engineering surveys (and soil tests where applicable) and other reasonably necessary tests (collectively "Tests") to determine the suitability of the Premises for Tenant's (as defined herein) and for the purpose of preparing for the construction of Tenant's Facilities. During any Tests or pre-construction work, Tenant will have insurance as set forth in Section 13, Indemnification and Insurance. Tenant will notify City of any proposed Tests or pre-construction work and will coordinate the scheduling of same with City. If Tenant determines that the Premises are unsuitable for Tenant's contemplated use, then Tenant will notify City and this Lease will terminate.

(b) Tenant has the right to construct, maintain and operate on the Premises radio communications facilities, including but not limited to, radio frequency transmitting and receiving equipment, batteries, utility lines, transmission lines, radio frequency transmitting and receiving antennas and supporting structures and improvements. In connection therewith, Tenant has the right to do all work necessary to prepare, add, maintain and alter the Premises for Tenant's communications operations and to install utility lines and transmission lines connecting antennas to transmitters and receivers. All of Tenant's construction and installation work shall be performed at Tenant's sole cost and expense and in good and workmanlike manner. Title to Tenant's Facilities and any equipment placed on the Premises by Tenant shall be held by Tenant. All Tenant's Facilities shall remain the property of Tenant and are not fixtures. Tenant has the right to remove all of Tenant's Facilities at its sole expense on or before the expiration or termination of this Lease.

(c) City shall provide access to the Tenant, Tenant's employees, agents, contractors and subcontractors to the Premises: twenty-four (24) hours a day, seven (7) days a week, at no charge to Tenant. City represents and warrants that it has full rights of ingress to and egress from the Premises, and hereby grants such rights to Tenant to the extent required to construct, maintain, install and operate Tenant's Facilities on the Premises. Tenant's exercise of such rights shall not cause undue inconvenience to City.

(d) City shall maintain all access roadways from the nearest public roadway to the Premises in a manner sufficient to allow access. City shall be responsible for maintaining and repairing such roadways, at its sole expense, except for any damage caused by Tenant's use of such roadways. If Tenant causes any such damage, it shall promptly repair same.

(e) In the event Tenant's personnel or equipment damages City's roof, Tenant shall repair the damage at Tenant's expense.

(f) City shall allow Tenant to have sub-metering equipment installed on City's existing utility services at Tenant's cost.

(g) Tenant shall have the right to install utilities, at Tenant's expense, and to improve the prevent utilities on or near the Premises (including, but not limited to the installation of emergency back-up power). Subject to City's approval of the location, which approval shall not be unreasonably withheld, Tenant shall have the right to place utilities on (or to bring utilities across) City's Property in order to service the Premises and Tenant's Facilities. Upon Tenant's request, City shall execute recordable easement(s) evidencing this right.

(h) Tenant shall fully and promptly pay for all utilities furnished to the Premises for the use, operation and maintenance of Tenant's Facilities.

(i) Upon the expiration, cancellation or termination of this Lease, Tenant shall surrender the Premises to City in good condition, less ordinary wear and tear.

1.03 **Term**. The initial Lease term will be five (5) years ("Initial Term"), commencing on the Effective Date. The Initial Term will terminate on the fifth (5th) annual anniversary of the Effective Date. This Lease will automatically renew for four (4) additional five (5) year term(s) (each five (5) year term shall be defined as the "Extension Term"), upon the same terms and conditions set forth herein. Tenant must notify City in writing of Tenant's intention not to renew this Lease at least ninety (90) days prior to the expiration of the existing Term. After expiration of the second Extension Term, City will have the option to terminate this Agreement upon providing at least fifteen (15) months' prior written notice to Tenant. If Tenant remains in possession of the Premises after the termination or expiration of this Lease then Tenant will be deemed to be occupying the Premises on a month-to-month basis (the "Holdover Term"), subject to the terms and conditions of this Lease. The Initial Term, the Extension Term and the Holdover Term are collectively referred to as the Term ("Term").

1.04 **Holding Over**. Any holding over after the expiration of the initial or extended term of this Lease with the consent of City shall be construed to be a tenancy from month-to-month at a monthly rental equal 125% of the monthly rental for final month of the previous term. Tenant's occupancy during any period of holding over shall otherwise be on the same terms and conditions herein specified so far as applicable.

1.05 **Tenant Option to Elect Early Termination**. Provided Tenant is in compliance with all terms and conditions of this Lease including, but not necessarily limited to the payment of rent and other charges, Tenant shall have the option to terminate this Lease following the end of the twenty-fourth (24) month following the Effective Date. Tenant may terminate the Lease upon ninety (90) days prior written notice to City for any reason or no reason, provided Tenant pays City a termination fee equal to three (3) months' Rent, at the then-current rate, provided, however, that no such termination fee will be payable on account of the termination of this Lease by Tenant under any termination provision contained in any other Section of this Lease, including the following: Section

2.02(d) Interference, Section 9.01 Approvals, Section 11.01(a), Section 11.02 Condemnation, 17.09 Eminent Domain, or Section 17.1 Force Majeure.

1.06 **Conditions Precedent**. This Lease is conditioned upon Tenant, or Tenant's Assigns, obtaining all governmental permits and approvals enabling Tenant, or its assigns, to construct and operate mobile/wireless communications facilities on the Premises.

ARTICLE 2. USE OF LEASED PREMISES

2.01 **Use**.

a. Tenant may use the Premises for the transmission and reception of communications signals and the installation, construction, maintenance, operation, repair, replacement and upgrade of its communications fixtures and related equipment, cables, accessories and improvements, which may include a suitable support structure, associated antennas, equipment shelters or cabinets and fencing and any other items necessary to the successful and secure use of the Premises ("Tenant Facilities") (collectively, the "**Communication Facility**"), as well as the right to test, survey and review title on the Property, all at Tenant's sole cost and expense; Tenant further has the right to add, modify and/or replace equipment to be in compliance with any current or future federal, state or local mandated application, including, but not limited to, emergency 911 communication services, at no additional cost to Tenant or City (collectively, the "**Permitted Use**"). City and Tenant agree that any portion of the Communication Facility that may be conceptually described on **Exhibit B** will not be deemed to limit Tenant's Permitted Use. If **Exhibit B** includes drawings of the initial installation of the Communication Facility, City's execution of this Lease will signify City's approval of **Exhibit B**. Tenant may install and operate transmission cables from the equipment shelter or cabinet to the antennas, electric lines from the main feed to the equipment shelter or cabinet and communication lines from the main entry point to the equipment shelter or cabinet and Tenant shall mark its wires, cables conduits, pipes and antennas with identifying markings. Following initial approval of Tenant's Facilities, Tenant may make Property improvements, alterations, upgrades, or additions appropriate for Tenant's use upon obtaining the prior written consent of City, which shall not be unreasonably withheld, conditioned, or delayed ("**Tenant Facilities**"). Tenant Changes include the right to construct a fence around the Premises and undertake any other appropriate means to secure the Premises or equipment at Tenant's expense. Tenant agrees to comply with all applicable governmental laws, rules, statutes and regulations, relating to its use of the Communication Facility on the Property. Tenant has the right to modify, supplement, replace, upgrade, expand the equipment, increase the number of antennas or relocate the Communication Facility within the Premises at any time during the term of this Lease. Tenant may be allowed to make such alterations to the Property in order to accomplish Tenant's Changes or to insure Tenant's Communication Facility complies with all applicable federal, state or local laws, rules or regulations.

b) Prior to the initial installation of Tenant's Facilities, Tenant will supply City with plans and specifications ("**Plans**") to be reviewed and approved by City prior to commencement of construction. City's approval will not be unreasonably withheld, conditioned or delayed (and in no event delayed beyond thirty (30) days). City's approval right in the foregoing sentence shall include the right to approve the design, height, setbacks, and other physical and aesthetic characteristics of the proposed Tenant's Facilities and any subsequent modification thereto, whether by Tenant or Collocator. After approval, the Plans will be considered incorporated in this Lease as **Exhibit B**. If City disapproves the

Plans then Tenant will provide City with revised Plans, such revisions to be within Tenant's reasonable discretion. In the event City disapproves of the revised Plans, Tenant may either i) make further revisions to the Plans and submit them to City for review or ii) terminate this Lease without further liability by providing written notice to City. City will not knowingly permit or suffer any person to copy or utilize the Plans for any purpose other than as provided in this Lease and will return the Plans to Tenant promptly upon request. Tenant maintains the right to perform routine maintenance, repairs, replacements and upgrades without City approval when no changes to the exterior appearance of Tenant's Facilities are made.

c) Tenant acknowledges that City may elect to enter into agreements with other wireless telecommunications operators and that Tenant may be required to share certain common facilities on the Property with such operators. It is the intent of City to consolidate and coordinate all such wireless telecommunications facilities at the Property in a logical manner in order to maximize the use of space and minimize the impact (visual and otherwise) of wireless telecommunications equipment and antennas. Tenant agrees to reasonably cooperate with the other wireless telecommunications operators and City to coordinate efficient collocation of equipment and antennas and to promptly resolve any interference issues that may arise due to the presence of multiple operators, subject to the provisions of Paragraph 2.02 or alter the nature or use of transmissions, or otherwise unreasonably interfere with the operations of any other wireless telecommunications operators on the Property. Notwithstanding anything to the contrary set forth in this Lease, City agrees that Tenant shall have exclusive possession of the ground space portion of the Premises during the term of this Lease and any extensions thereof. In addition, in the event of any collocation, neither City nor any other tenant shall interfere with Tenant's antennas as located upon the Building.

2.02 **Interference.**

a) Where there are existing radio frequency user(s) on the Property, City will provide Tenant with a list of all existing radio frequency user(s) on the Property to allow Tenant to evaluate the potential for interference. Tenant warrants that its use of the Premises will not interfere with existing communications configurations, radio frequencies or operating equipment of existing user(s) on the Property ("Pre-Existing Communications") so disclosed by City, as long as the existing radio frequency user(s) operate and continue to operate within their respective frequencies and in accordance with all applicable laws and regulations. Tenant's Facilities shall comply with all non-interference rules of the Federal Communications Commission ("FCC"). Upon written notice from City of apparent interference by Tenant with Pre-Existing Communications, Tenant shall have the responsibility to promptly terminate such interference or demonstrate to City with competent information that the apparent interference is fact is not caused by Tenant's Communication Facility or operation.

b) City will not grant, after the Effective Date of this Lease, a lease, license or any other right to any third party for the use of the Property, if such use may in any way adversely affect or interfere with the Communication Facility, the operations of Tenant or the rights of Tenant under this Lease. City will notify Tenant in writing prior to granting any third party the right to install and operate communications equipment on the Property.

c) City will not use, nor will City permit its employees, tenants, licensees, invitees or agents to use, any portion of the Property in any way which interferes with the Communication Facility, the operations of Tenant, or the rights of Tenant under this Lease. City will cause any such interference to cease within twenty-four (24) hours after receipt of notice of interference from Tenant.

In the event any such interference does not cease within the aforementioned cure period, City shall cease all operations which are suspected of causing interference (except for intermittent testing to determine the cause of such interference) until the interference has been corrected. If such remediation effort is not successful, then Tenant's sole remedy for breach of this Section with regard to interference by public safety or Airport governmental communications systems shall be to terminate this Lease, as provided at Section 6(d), without payment of a termination fee.

d) For purposes of this Lease, "interference" may include, but is not limited to, any use on the Property or Surrounding Property that causes electronic or physical obstruction with, or degradation of, the communications signals from the Communication Facility.

e) Notwithstanding the foregoing or any other provision of this Lease, City shall have the right to upgrade, service, replace, and install new equipment on the Property that emit radio frequencies if such equipment is limited to governmental uses and only if such equipment does not interfere with the operations of the Communication Facility or the facilities of any subtenants, or Tenant's rights under this Lease.

2.03 **Airport Rules & Regulations**. In making use of the leased Premises as specified in this Lease, Tenant shall, in common with all other users of the Airport, comply with the following rules and regulations:

a) Tenant acknowledges that it has received and reviewed a copy of City's Airport Operating Ordinance (Marina Municipal Code Chapter 13.22, as may be amended) and shall comply with the minimum operating standards or requirements promulgated by City and applicable to each of Tenant's activities on the Airport.

b) Subject to the provisions of the California Code of Civil Procedure §731a, Tenant shall not do or permit to be done upon the Premises any act or thing which constitutes a nuisance, i.e., which may disturb the quiet enjoyment of City, any other tenant of City or private businesses on adjacent land or neighboring property. If City notifies Tenant that such a nuisance or disturbance exists, Tenant agrees, within seventy-two (72) hours from receiving written notice by City, to abate or otherwise cause said nuisance to be cured. In the event Tenant has not taken corrective action within seventy-two (72) hours, City may enter and abate said nuisance, including but not limited to entering the Premises and abating the nuisance or disturbance, at the expense of Tenant without any liability whatsoever to City for monetary loss or anticipated profits of Tenant or others.

c) Tenant shall be responsible for the maintenance and repair of the Premises as set forth in §10.02 of this Lease and shall keep and maintain the Premises in good condition, order and repair, and shall surrender same upon the expiration of this Lease in the condition in which they are required to be kept, reasonable wear and tear and damage by the elements not caused by Tenant's negligence excepted. Tenant, by this Lease, specifically waives the provisions of §§1941 and 1942 of the California Civil Code with respect to City's obligations for the tenantability of leased Premises and Tenant's right to make repairs and deduct the expenses of such repairs from rent.

d) Semi-trucks and trailers delivering materials and shipping finished products shall not do so within the Airport operations area unless approved by the Airport Services Manager in writing. Email shall be acceptable for this purpose.

e) Tenant understands and agrees that its right to use the leased Premises for the purposes provided for by this Lease shall not be, and shall not be construed to be, exclusive of the right of any other person or firm to operate the same or a similar business at the Airport and to lease premises at the Airport from City for such purposes, within the meaning of §308A of the Federal Aviation Act of 1958, as amended (49 U.S.C. 40103 et seq.). City reserves the right, at its sole discretion, to grant others certain rights and privileges upon the Airport which are identical in part or in whole to those granted to Tenant by this Lease, excepting any rights with respect to the use or possession of the leased Premises.

ARTICLE 3. USE AND MAINTENANCE OF AIRPORT FACILITIES

3.01 **FAR Notification Requirements**. Tenant agrees to comply with the notification and review requirements covered in of the Federal Aviation Regulations ("FAR") in the event future construction of a building or telecommunications tower is planned for the leased Premises or in the event of any planned modification or alteration of any present or future building or structure situated on the leased Premises. This requires the submission of FAA Form 7460-1 *Notice of Proposed Construction or Alteration* to the FAA. Tenant by accepting this Lease expressly agrees for itself, its successors and assigns that it will not erect nor permit the erection of any structure or building nor permit objects of natural growth or other obstructions on the land leased hereunder above a height as determined by the application of the requirements of Title 14 CFR Part 77. In the event the aforesaid covenants are breached, City reserves the right to enter upon the land hereunder and to remove the offending structure or object or cut the offending natural growth, all of which shall be at the expense of Tenant.

3.02 **FAA Safety & Security Rules & Regulations**. Tenant will conform to Airport and FAA safety and security rules and regulations regarding use of the Airport operations area including runways, taxiways, and aircraft aprons by vehicles, employees, customers, visitors, etc., in order to prevent security breaches and avoid aircraft incursions and vehicle/pedestrian deviations; will complete and pass airfield safe driving instruction program when offered or required by the Airport; and will be subject to penalties as prescribed by the Airport Manager for violations of the Airport safety and security requirements.

3.03 **Non Interference with Landing and Taking off of Aircraft**. Tenant by accepting this Lease agrees for itself, its successors and assigns that it will not make use of the leased premises in any manner which might interfere with the landing and taking off of aircraft or otherwise constitute a hazard. In the event the aforesaid covenant is breached, City reserves the right to enter upon the Premises hereby leased and cause the abatement of such interference at the expense of Tenant.

ARTICLE 4. RENTS AND FEES

4.01 **Time and Place of Payment**. Tenant shall pay by check all rental charges and all other obligations due to City under this Lease every month in advance on or before the first day of the month during the term of this Lease at the office of the City Finance Director, City Hall, 211 Hillcrest Avenue, Marina, California 93933. Check shall be made payable to City of Marina, and note " DISH Communication Facility at 761 Neeson Road." The rent for certain months of this Lease may be pro-

rated. For purposes of calculating and pro-rating rents and other charges due, each month shall be considered to have thirty (30) days, and each year of the initial or any extended term of this Lease to have three-hundred sixty (360) days.

4.02 **Rent: Initial Rent Amount**. The monthly rent payable shall be $2,900. Thereafter, every two years during the Initial and all Extension Terms, the rent shall be increased by two and one-half percent (2.5%), rounded to the nearest dollar, above the monthly rent payable in the prior year:

Rent for Year Three =	$2,973 per month
Rent for Year Five =	$3,047 per month
Rent for Year Seven =	$3,123 per month
Rent for Year Nine =	$3,201 per month
Rent for Year Eleven =	$3,281 per month
Rent for Year Thirteen =	$3,363 per month
Rent for Year Fifteen =	$3,447 per month
Rent for Year Seventeen =	$3.533 per month
Rent for Year Nineteen =	$3,622 per month
Rent for Year Twenty-one =	$3,712 per month
Rent for Year Twenty-three=	$3,805 per month
Rent for Year Twenty-five =	$3,900 per month

Tenant shall also pay as additional rent, every month as provided above, the amounts set forth in Article 12 herein for utilities. Tenant shall pay all of its operating expenses, insurance premiums and taxes including possessory interest tax). Rent and all net charges shall commence upon 30-days after the Effective Date.

4.03 **Delinquency Charge**. Tenant hereby acknowledges that late payment by Tenant of rent and other sums due hereunder will cause City to incur costs not contemplated by this Lease, the exact amount will be extremely difficult to ascertain. Should any payments due under this Lease remain unpaid ten (10) days after the due date of such payment, a penalty of ten percent (10%) shall be added to any payments past due. City may, but is not required to, provide written notice to Tenant of Tenant's failure to pay rent when due. City and Tenant agree that this late charge represents a fair and reasonable estimate of costs that City will incur by reason of the late payment of rent by Tenant. Acceptance of any such late charge shall not constitute a waiver of Tenant's default with respect to the overdue amount, nor prevent City from exercising any of the other rights and remedies available to it by reason of such default. Interest on any unpaid rents, charges and any penalty shall accrue at the rate of one and one-half percent (1.5%) per month thereafter until paid.

4.04 **Performance Deposit**. Upon execution of this Lease, Tenant will pay to City the sum of $2,900, deposited with City's funds as partial security of future rental and other payments due. The parties agree that these funds will remain on deposit with City and shall be considered a performance deposit under this Lease. In the event City is required to utilize this deposit or any portion thereof during the term of this Lease for the payment of rents, charges, or fees due, Tenant within thirty (30) days from such use of the deposit funds shall deposit with City an additional sum sufficient to restore the performance deposit to the amount herein set forth. This performance deposit, or any remaining portion thereof, shall be returned to Tenant without interest at the termination of this Lease, after deduction of any amounts therefrom for payment of any obligation of Tenant due and owing to City

under any of the provisions of this Lease.

4.07 **Accord and Satisfaction**. No payment by Tenant or receipt by City of a lesser amount of any sum due hereunder shall be deemed to be other than on account of the earliest due rent or payment, nor shall any endorsement or statement on any check or payment, or any letter accompanying any such check or payment, be deemed an accord and satisfaction, and City may accept such check or payment and pursue any other remedy available in this Lease, at law or in equity. City may accept any partial payment from Tenant without invalidation or any contractual notice require to be given herein (to the extent such contractual notice is required) and without invalidation of any notice require to be given pursuant to California Code of Civil Procedure §1161 et seq., or any successor statute thereto.

4.08 **Commissions.** City shall not be liable for the payment of any brokerage commissions or fees associated with this Lease to engineers, contractors, or attorneys working on behalf of Tenant.

ARTICLE 5. TAXES AND ASSESSMENTS

5.01 **Payment**. Tenant shall pay, before the delinquency date, any and all taxes, assessments, license fees and other public charges which may be levied, assessed or imposed upon any of Tenant's interests arising under this Lease, upon Tenant's business, upon Tenant for the privilege of conducting business or upon any property of Tenant upon the Property. Tenant is advised that this Lease may create a possessory interest (California Revenue & Taxation Code §107.6) and that Tenant will be responsible for the payment of any possessory interest tax so assessed. Tenant's payment of possessory interest tax shall not reduce in any way any charges or other fees required to be paid by Tenant under this Lease. Tenant shall not permit or suffer any liens to be imposed upon the Premises or any portion hereof and shall promptly discharge same, provided, however, that Tenant may, if it so desires, contest the legality of same following prior written notice to City. In the event of a contest of a lien, Tenant shall provide a bond in an amount and in a form acceptable to City immediately following a request from City.

Notwithstanding anything to the contrary set forth herein, if any such tax, assessment (including any assessment imposed by the Monterey County Water Resources Agency) license fee, other public charge or possessory interest tax is levied, assessed or imposed upon any of Tenant's interests arising under this Lease and the bill for such charge is not sent directly to Tenant, Tenant agrees that City may, at its option, either pay the amount due and be reimbursed by Tenant for Tenant's equitable share or provide to Tenant a copy of any notice, assessment or billing relating to such tax, assessment, license fee or other public charge for which Tenant is responsible under this Lease within ninety (90) days of receipt of the same by City. City's determination of the amount due from Tenant shall be made in good faith and on an equitable basis. If Tenant disagrees with City's determination of the amount to be reimbursed or paid by Tenant, Tenant must reimburse the City or pay the amount directly and may then appeal, challenge or seek modification of the amount billed by City with City's Airport Commission, whose determination in this matter will be final and conclusive. Tenant shall have no obligation to reimburse City or make payment of any such charge until Tenant has received the notice, assessment or billing relating to such payment as set forth in the preceding sentence. In the event City fails to provide to Tenant a copy of any such tax notice, assessment or billing within the ninety (90) day period set forth herein, Tenant shall be relieved of the obligation or responsibility to make a payment under such notice, assessment or billing referred to in the notice, assessment or billing which was not timely delivered by City to Tenant.

ARTICLE 6. SUBORDINATE TO FEDERAL AGREEMENT AND REGULATIONS

6.01 **Subordinate to Agreements with U.S**. This Lease shall be subordinate to the provisions and requirements of any existing or future agreement between City and the United States government or any department thereof relative to federal aid for the development and maintenance of the Airport or the development, operation or maintenance of the Airport. Failure of Tenant or any occupant to comply with the requirements of any existing or future agreement between City and the United States, which failure shall continue after reasonable notice to make appropriate corrections, shall be cause for immediate termination of Tenant's rights hereunder. Tenant acknowledges it has been given an opportunity to review the Deed of Conveyance for the leased Premises from the U.S. Army to City and agrees to comply with all requirements pertinent to Tenant's activities contained in that document.

6.02 **War or National Emergency**. This Lease and all provisions hereof shall be subject to whatever right the United States government has affecting the control, operation, regulation and taking over of the Airport or the exclusive or non-exclusive use of the Airport by the United States during a time of war or national emergency.

6.03 **Conformance with Federal Aviation Administration ("FAA") Regulations**. Tenant agrees that Tenant's use of the leased Premises, including all future construction, modification or alteration thereon, shall comply with all applicable FAA regulations now in force or that may be hereafter adopted by Federal authority. This Lease and Tenant's occupancy of the leased Premises is governed by and subject to the provisions set forth in the FAA Assurances (**"Exhibit D"**) attached hereto and incorporated herein by this reference and as they may be amended in the future. In the event of a conflict between the Federally Aviation Administration Assurances and the terms and conditions of this Lease, the Federally Aviation Administration Assurances shall prevail and control.

ARTICLE 7. NON-DISCRIMINATION

7.01 **Non-Discrimination**.

(a) Tenant, for its personal representatives successors in interest, and assigns, as a part of the consideration hereof, does hereby covenant and agree "as a covenant running with the land" that in the event facilities are constructed, maintained, or otherwise operated on the leased Premises for a purpose for which a Department of Transportation ("DOT") program or activity is extended or for another purpose involving the provision of similar services or benefits, Tenant shall maintain and operate such facilities and services in compliance with all other requirements imposed pursuant to 49 CFR Part 21, Nondiscrimination in Federally-Assisted Programs of the Department of Transportation, and as said Regulations may be amended.

(b) Tenant, for its personal representatives, successors in interest, and assigns, as a part of the consideration hereof, does hereby covenant and agree "as a covenant running with the land" that: (1) no person on the grounds of race, color or national origin shall be excluded from participation in, denied the benefits of, or be otherwise subjected to discrimination in the use of the leased Premises, (2) that, in the construction of any improvements on, over, or under such land and the furnishing of services thereon, no person on the grounds of race, color, or national origin shall be excluded from

participation in, denied the benefits of, or otherwise be subjected to discrimination, (3) that Tenant shall use the leased Premises in compliance with all other requirements imposed by or pursuant to 49 CFR Part 21, Nondiscrimination in Federally-Assisted Programs of the Department of Transportation, and as said Regulations may be amended.

(c) Tenant assures that it will comply with pertinent statutes, Executive Orders and such rules as are promulgated to assure that no person shall, on the grounds of race, color, national origin, sex, age or handicap be excluded from participating in any activity conducted with or benefiting from Federal assistance. This provision obligates Tenant or its transferee for the period during which Federal assistance is extended to the airport program, except where Federal assistance is to provide, or is in the form of, personal property or real property or interest therein or structures or improvements thereon. In these cases, this provision obligates the party or any transferee for the longer of the following periods: (a) the period during which the property is used by City as the Airport sponsor or any transferee for a purpose for which Federal assistance is extended, or for another purpose involving the provision of similar services or benefits; or (b) the period during which City as the Airport sponsor or any transferee retains ownership or possession of the property. In the case of contractors, this provision binds the contractors from the bid solicitation period through the completion of the contract.

(d) In the event of breach of any of the nondiscrimination covenants, City (through the City Manager or designee) shall have the right to terminate this Lease, and to re-enter the Premises, and hold the same as if this Lease had never been made or issued. This provision does not become effective until the procedures of 49 CRF Part 21 are followed and completed including expiration of appeal rights.

7.02 **Compliance with Non-Discrimination Covenants**. Without limiting the generality of any other terms or provisions of this Lease, noncompliance with §7.01 above shall constitute a material breach thereof and in the event of such noncompliance City (through the City Manager or designee) shall have the right to terminate this Lease and the estate hereby created without liability therefor or, at the election of the City or the United States, either or both said governments shall have the right to judicially enforce §§7.01 and 7.02 of this Article 7.

7.03 **Covenants in Other Ancillary Agreements**. Tenant agrees that it shall insert the above three (3) provisions in any agreement, sublease, assignment or other agreement by which Tenant grants a right or privilege to any person, firm or corporation to render accommodations and/or non-aeronautical services to the public on the Premises.

ARTICLE 8. CONDITION OF THE PREMISES

8.01 **Acceptance of Leased Premises**. Tenant understands the leased Premises were formerly used by the federal government as part of an Army air base, that surrounding lands which were also part of such Army air base have, in the past been found to contain concentrations of volatile organic chemicals which exceed standards prescribed by the environmental agencies and the state and federal governments. Pursuant to Health & Safety Code §25359.7(a), as may be amended, Tenant is provided this notice that the structure may contain asbestos materials and lead-based paints. City has provided to Tenant an asbestos survey report prepared by the U.S. Army Corps of Engineers for Building 524, which is attached hereto as **Exhibit "E"**. Tenant acknowledges that City has granted to

Tenant the right to review all maps and records of the old Army air base presently on file in the office of the City's Planning Department as well as the right to inspect the leased Premises and perform any tests of the soils and improvements thereon or the groundwater thereunder, all in order to afford Tenant a full and complete opportunity to investigate and determine whether the leased Premises can be used for the purposes for which it is being leased.

8.02 **No Warranty**. Tenant further understands and agrees that no representation, statement, or warranty, express or implied, has been made by or on behalf of City as to the condition of the leased Premises or the suitability of the Premises for its intended use, save and except for the representation and warranty that no City officer, employee, contractor, subcontractor, tenant, subtenant or agent has caused any condition of pollution or contamination which may now exist on the leased Premises. Such representation and warranty, however, shall not extend to any condition of pollution or contamination caused by the federal government. Upon entering into occupancy, Tenant also agrees to accept the leased Premises in its present condition and "as is", with respect to all conditions which may now exist on or under the leased Premises save and except for any condition of pollution or contamination caused by an officer, employee, or agent of City. Moreover, Tenant agrees to waive any claim or right of action against City which Tenant now has or hereafter may acquire arising out of the condition of the leased Premises, its soils and/or the groundwater underlying the leased Premises, including but not limited to any claim of indemnity which Tenant may have by reason of costs incurred by Tenant arising out of the abatement or cleanup of any pollution or contamination condition discovered on the leased Premises hereinafter required under applicable state, federal or city laws or regulations save and except for a claim or right of action arising out of a condition of pollution or contamination caused by an officer, employee or agent of City. Tenant is not responsible for the cost of environmental abatement, remediation or cleanup of pollution or contamination which is unrelated to the activities of Tenant, or its officers, employees, agents, contractors or invitees, on the Premises. As of the Effective Date, Tenant waives, releases and discharges City, its Council, Commissions, Boards and Departments, their respective elected and appointed officials, officers, employees, agents, representatives and attorneys from any and all present and future claims, demands suits, legal and administrative proceedings, and from all liability, damages, losses, costs, liabilities, fees and expenses (including without limitation attorney's fees) arising out of or in any way connected with Tenant's use, maintenance, leasehold or operation of the leased Premises. Tenant acknowledges that it is aware of and familiar with the provisions of Section 1542 of the California Civil Code of Civil which provides as follows:

> "A general release does not extend to claims which the creditor does not know or suspect to exist in his or her favor at the time of executing the release, which if known by him or her must have materially affected his or her settlement with the debtor."

To the extent of the release set forth in this Section 8.02, Tenant hereby waives and relinquishes all rights and benefits which it may have under Section 1542 of the California Civil Code.

Tenant's Initials: _____

8.03 **Disclosure to Sub Lessees and Assignees**. Tenant agrees that in the event Tenant subleases all or any portion of the Premises or assigns its interest in this Lease, Tenant shall indemnify and defend City for, from and against any matters which arise as a result of Tenant's failure to disclose any relevant information about the Premises or the improvements to any subtenant or assignee. It is the intention of City and Tenant that the immediately preceding sentence shall survive any release of

Tenant by City upon any assignment of this Lease by Tenant.

ARTICLE 9. LEASEHOLD IMPROVEMENTS

9.01 **Approvals.**

a) City agrees that Tenant's ability to use the Premises is contingent upon the suitability of the Premises for Tenant's Permitted Use and Tenant's ability to obtain and maintain all governmental licenses, permits, approvals or other relief required of or deemed necessary or appropriate by Tenant for its use of the Premises, including without limitation applications for zoning variances, zoning ordinances, amendments, special use permits, and construction permits (collectively, the "**Government Approvals**"). City authorizes Tenant to prepare, execute and file all required applications to obtain Government Approvals for Tenant's Permitted Use under this Lease and agrees, at no cost to City, to reasonably assist Tenant with such applications and with obtaining and maintaining the Government Approvals. In addition, Tenant shall have the right to initiate the ordering and/or scheduling of necessary utilities. Notwithstanding anything contained herein to the contrary, nothing set forth in this Lease shall be construed as a limitation on City's discretion to deny or condition any and all Government Approvals required for Tenant's use of the Premises, provided such denial or condition is made in good faith. In the event that any of such applications should be finally rejected or any Government Approval issued to Tenant is conditioned, canceled, expires, lapses, is materially delayed, or is otherwise withdrawn or terminated by governmental authority so that Tenant, in its sole discretion, will be unable to use the Premises for its intended purposes, Tenant shall have the right to terminate this Lease.

b) Tenant has the right, at its sole cost and expense, to obtain a title report or commitment for a leasehold title policy from a title insurance company of its choice and to have the Property surveyed by a surveyor of Tenant's choice. In the event Tenant determines, in its sole discretion, due to the title report results or survey results, that the condition of the Premises is unsatisfactory, Tenant will have the right to terminate this Lease upon notice to City.

Tenant may also perform and obtain, at Tenant's sole cost and expense, soil borings, percolation tests, engineering procedures, environmental investigation or other tests or reports on, over, and under the Property, necessary to determine if Tenant's use of the Premises will be compatible with Tenant's engineering specifications, system, design, operations or Government Approvals. 9.02

Improvements to Leased Premises. During the initial or any extended term of this Lease Tenant or its contractors or subcontractors shall not make any additions or alterations to the improvements on the leased Premises which attach to, alter, or in any way affect the structural integrity of the Premises, without the prior written consent of City, such consent not to be unreasonably delayed or withheld. Moreover, upon receiving consent to make an addition or alteration to the improvements on the leased Premises which attach to, alter or in any way affect any structural element of Building 524, Tenant or its contractors or subcontractors shall not commence work on the construction or installation of such added or altered improvement until plans and specifications for same have been submitted to and approved by City's review processes and a building permit issued. During the initial or any extended term of this Lease, Tenant may make or cause to be made improvement which do not attach to, alter or in any way affect the structural integrity of the Premises and are required for Tenant's use. In making any such improvement Tenant shall obtain all required permits and be solely responsible for any damage to the Premises. Prior to making any improvements that do not attach to, alter or in any way affect the structural integrity of the Premises Tenant shall notify the Airport

Manager in writing concerning the improvement and the Airport Manager shall have ten (10) calendar days to object. If the Airport Manager lodges an objection to the improvement the Airport Manager and Tenant shall work in good faith to achieve Tenant's goal.

9.03 **Performance Bond**. Tenant shall cause to be made, executed and delivered to City, prior to the date of commencement of any work in or on the leased area which attach to, alter or in any way affect any structural element of Building 524, performance bonds approved as to form and as to surety by City, with Tenant or Tenant's contractor as principal, and City specifically named as an additional insured, each in the sum of one hundred percent (100%) of the amount of the contract for all work costing in excess of $5,000.00 for a) the said required work in accordance with the approved plans and specifications and b) to provide that if Tenant or its contractor or contractors fail to pay for any materials, provisions or other supplies, used in or upon, for or about the performance of the work to be done, or for any work or labor thereon of any kind, that the surety will pay the same, in an amount not exceeding the sum specified in the bond, and also, in case suit is brought upon the bond, a reasonable attorney's fee as set by the court.

9.05 **Title to Improvements**. Upon termination of this Lease or any extended periods thereof, all structural improvements or other fixtures on the leased Premises made by Tenant or its contractors or subcontractors shall become the property of City without payment of any compensation therefor; provided, however, that upon termination of this Lease, City shall have the option to require Tenant to remove any or all added improvements or restore any altered improvement to the same condition as it was at the commencement of the term of this Lease, all at Tenant's sole cost and expense.

9.06 **Prevailing Wages**. Tenant shall determine if it must abide by the regulations promulgated by the Fort Ord Reuse Authority ("FORA") in the FORA Master Resolution regarding the payment of prevailing wages for new construction projects on former Fort Ord properties including the requirement that Tenant, any contractor, and any subcontractor performing work for which prevailing wages are required on the Premises be registered with the California Department of Industrial Relations ("DIR") in accordance with California Labor Code §1725.5. For any work paid for in whole or in part by public funds, Tenant shall comply with the requirements and implementing regulations of California Labor Code §1720 et seq. for payment of prevailing wages on "public works" projects.

9.07 **City Improvements**. Except as otherwise expressly set forth in this Lease, the City is not obligated to construct or install any improvements on or off of the leased Premises. The City shall have no obligation on account of any construction or installation of any improvement by Tenant to pay for all or any portion of the costs or expenses arising out of such construction or installation.

9.08 **Right of Entry for Construction and Maintenance**. The City and Tenant each agree that the other shall be permitted to enter upon its property, as may reasonably be necessary in order for Tenant to make the Improvements or do other work required by this Lease or in order for the City to fulfill its responsibilities to make improvements and for maintenance as set forth in Sections 1.02 and 10.01, and to maintain or repair the respective party's property. The right of each party to enter the other's property or the Premises shall extend to such party's lessees, and licensees and contractors. A party's exercise of its right of entry shall not unreasonably interfere with the other party's use of its property. Any interference shall be temporary and all work on the entering party's property shall proceed expeditiously as necessary to avoid or minimize any such interference. The City shall provide reasonable advanced notice prior to entry to the property and make reasonable efforts to do so during

normal business hours. A party intending to exercise the right of entry shall first give to the other party reasonable prior written notice before commencement of any work on the other party's property. In the event a party's entry results in any damage to the other party's property, the same shall be repaired expeditiously at the entering party's expense.

9.09 **Performance and Labor and Material Bonds**. Before the commencement of any construction work hereunder for improvements, City will require that Tenant, or its contractors, at no cost or expense to City, furnish to the City the following security concerning Improvements to be constructed by or on behalf of Tenant and covering any obligation of Tenant under the Prevailing Wage Requirements provisions of this Lease:

(a) Performance Bond. A bond in cash, or securities satisfactory to the City in its sole discretion, or issued by a surety company licensed to transact business in the State of California and satisfactory to City, in a sum of not less than 100% of any construction contract (or in the event Tenant serves as its own general contractor, 100% of the anticipated construction costs of Tenant improvements) for the proposed Tenant improvements, payable to City and conditioned upon full, faithful and satisfactory performance by Tenant its contractor(s) of the such Tenant improvements within the period of time specified in the construction schedule. Upon Tenant's or its contractor(s) full, faithful and satisfactory performance and completion of the such Tenant improvements, said bond shall be cancelled or returned to Tenant or contractor, as the case may be; otherwise, such part of the amount of the bond as shall be required to complete such Tenant improvements shall be payable to or retained by City, as the case may be. In the event that said bond shall be in cash, City shall have the right to invest and reinvest the same as it shall see fit, and any interest earned thereon during the time it is so held by City shall accrue to and belong to City, and Tenant or contractor shall have no interest in or claim thereto.

(b) Labor and Material Bond. A bond in cash or securities satisfactory to City in its sole discretion, or issued by a surety company licensed to transact business in the State of California and satisfactory to City with Tenant's contractor(s), as principal(s), in a sum not less than 100% of any construction contract (or in the event Tenant serves as its own general contractor, 100% of the anticipated construction costs of Tenant improvements) for the proposed Tenant improvements as such costs are set forth in the estimated Tenant improvement completion costs, guaranteeing the payment for all materials, provisions, provender, supplies and equipment used in, upon, for or about the performance of said work or labor done thereon of any kind whatsoever and protecting City from any liability, losses or damages arising therefrom.

(c) General. In the event and to the extent that Tenant obtains from Tenant's contractor(s) the bonds required hereunder which are satisfactory to City, the City, upon application by Tenant and upon naming City as an additional obligee of Tenant's principal and surety under such bond or bonds, shall release Tenant from and consent to the cancellation of the bond or bonds originally furnished by Tenant. It is understood and agreed that any bond which, as to City as obligee, is conditioned upon Tenant making all necessary payments to the contractor shall not be satisfactory to City. A combination performance and labor and material bond shall satisfy the foregoing requirements of this Section.

9.10 **No Right to Demolish**. Notwithstanding any other provisions of this Article, Tenant has no right to demolish Tenant improvements, once built, or to remove any improvements in whole or in

part, unless Tenant has received the prior written approval of City.

ARTICLE 10. MAINTENANCE AND REPAIR

10.01 **Tenant's Obligation under this Lease**. Tenant will keep and maintain the Premises in good condition, reasonable wear and tear and damage from the elements excepted.

10.02 **City's Obligations under this Lease**. City will maintain and repair the Property and access thereto, in good and tenantable condition, subject to reasonable wear and tear and damage from the elements. .

10.03 **Surrender**. On the last day of this Lease, Tenant shall surrender the leased Premises to City in the same condition as when received, broom clean, ordinary wear and tear excepted. Tenant shall repair any damage to the leased Premises occasioned by the removal of Tenant's trade fixtures, furnishings and equipment which repair shall include the patching and filling of holes and repair of structural damage to City's satisfaction.

10.04 **Removal/Restoration.** All portions of the Tenant Facilities brought onto the Property by Tenant will be and remain Tenant's personal property and, at Tenant's option, may be removed by Tenant at any time during the Term. City covenants and agrees that no part of Tenant's Facilities constructed, erected or placed on the Premises by Tenant will become, or be considered as being affixed to or a part of, the Property, it being the specific intention of the City that all improvements of every kind and nature constructed, erected or placed by Tenant on the Premises will be and remain the property of Tenant and may be removed by Tenant at any time during the Term. Upon the expiration, cancellation or termination of this Lease, Tenant shall remove Tenant's Facilities and all personal property and surrender the Premises in good condition, less ordinary wear and tear, and provide written verification of removal. Following termination of this Lease, if Tenant fails to remove Tenant Facilities from the Premises within thirty (30) days after City provides written notice to do so, then City may, at its option, remove Tenant's Facilities, and any costs associated with the same shall immediately become due and payable by Tenant. -If the time for removal causes Tenant to remain on the Premises after termination of this Lease, Tenant shall pay rent at the then existing monthly rate or on the existing monthly pro-rata basis if based upon a longer payment term, until such time as the removal of the Communication Facility is completed.

Tenant will repair any damage to the property resulting from Tenant's removal activities. Notwithstanding the foregoing, at the earlier of the expiration or termination of this Lease, Tenant will not be responsible for the replacement of any trees, shrubs, or other vegetation, nor will Tenant be required to remove from the Premises or the Property any foundations, underground utilities, or any part of the Communication Facility.

ARTICLE 11. DAMAGE OR DESTRUCTION OF IMPROVEMENTS

11.01 **Destruction or Substantial Damage of Premises**.

a) If, during the Initial or any Extension Term of this Lease, any of the insured improvements now or hereafter located on the leased Premises are substantially damaged or destroyed by a fire or other casualty (excluding earthquake or flood) beyond Tenant's control, City shall proceed with reasonable diligence to restore the leased Premises substantially to the condition thereof immediately prior to such damage or destruction; provided, however, that either party may elect to terminate this Lease by giving written notice of such election to the other party prior to commencement of restoration and not later than thirty (30) days after the date of loss, if the necessary restoration work would reasonably require a period longer than ninety (90) working days to complete, or City may elect to terminate within thirty (30) days of the date of loss if the total of the necessary restoration work would reasonably require the expenditure of more than fifteen thousand dollars ($15,000.00) including insurance proceeds. In no event will City be required to repair or replace Tenant's stock in trade, fixtures, improvements, furniture, furnishings and equipment.

(b) If, during the Initial or any Extension Term of this Lease, any substantial damage or destruction occurs to the leased Premises and the cost to repair the damage or destruction that is not covered by insurance exceeds fifteen thousand dollars ($15,000.00), City may terminate this Lease upon giving thirty (30) days prior written notice to Tenant; provided, however, that Tenant shall have the right to elect to pay the difference between the cost of repairing or restoring the damaged or destroyed improvements and fifteen thousand dollars ($15,000), in which case this Lease shall remain in full force and effect, and Tenant shall proceed with reasonable diligence to restore the Premises.

c) In no event will City be required to make repairs for any damage caused by the willful acts or negligence of Tenant or Tenant's employees, agents, subtenants or invitees, which damage Tenant shall promptly repair, replace or restore at Tenant's sole cost and expense. Upon any termination of this Lease under this section, City and Tenant shall be released thereby without further obligation to each other, except for obligations which have theretofore accrued and are then unpaid or unperformed.

d) In the event that restoration is made pursuant to this section, this Lease shall remain in full force and effect, and City shall be entitled to and shall have possession of the necessary parts of the leased Premises for such purposes, and if there is any substantial interference with Tenant's business on account of such repairs, Tenant shall be entitled to a proportionate reduction of rent during the time that said repairs are being made from the date on which such damage occurred until City completes repairs computed on the basis of the relation which the gross square foot area of space rendered untenantable bears to the total square footage of the Premises and the extent to which the Premises are unusable by Tenant. Should any dispute arise over the reduction of rent to which Tenant is entitled, such dispute shall be resolved according to the provisions of §17.04 of this Lease.

11.02 **Condemnation.** In the event City receives notification of any condemnation proceedings affecting the Property, City will provide notice of the proceeding to Tenant within forty-eight (48) hours. If a condemning authority including the City takes all of the Property, or a portion sufficient, in Tenant's sole determination, to render the Premises unsuitable for Tenant, this Lease will terminate as of the date the title vests in the condemning authority. The parties will each be entitled to pursue their own separate awards in the condemnation proceeds, which for Tenant will include, where applicable, the value of Tenant's Facilities, moving expenses, prepaid Rent, and business dislocation expenses, provided that any award to Tenant will not diminish City's recovery. Tenant will be entitled to reimbursement for any prepaid Rent on a prorata basis.

11.03 **Waiver**. Except as otherwise specifically provided in this section, Tenant specifically waives the provisions of §§1932 and 1933 of the California Civil Code with respect to the termination of the hiring of a thing by virtue of the perishing or destruction of the thing being hired.

ARTICLE 12. UTILITIES & ASSESSMENT

12.01 **Provision of Utilities**. Tenant shall have the right to use the utility service facilities serving the Premises at the commencement of the Term of this Lease. City will use its best efforts to continue all utility services, but it cannot and does not guarantee that there will be no interruptions of service and Tenant hereby waives any rights or claims it may have resulting from temporary interruptions of service. To the extent it has knowledge City will provide notice of any work scheduled that may interrupt the utility service to the leased Premises. If City is unable to provide access to utilities service facilities due to the imposition of any limit on consumption, the construction of additional utility facilities, or the allocation or curtailment of utility facilities or services, by law or regulation, it will have no obligation hereunder. If City is unable to provide utility service facilities due to the imposition of any limit on consumption or on the construction of additional utility facilities, or the allocation or curtailment of utility facilities or services by law or regulation, it shall have no obligation hereunder.

12.02 **Payment of Utilities**. Tenant will be responsible for paying on a monthly or quarterly basis all utilities charges for electricity, telephone service or any other utility used or consumed by Tenant on the Premises. City will fully cooperate with any utility company requesting an easement over, under and across the Property in order for the utility company to provide service to Tenant.

ARTICLE 13. INSURANCE & INDEMNIFICATION

13.01 **Insurance to be provided by Tenant**. Tenant shall obtain and maintain insurance coverage continuously in effect at all times during the term of this Lease, as set forth in **Exhibit "C."**

a) Tenant agrees to provide immediate notice to City of any claim or loss against Tenant or its contractors or subcontractors that includes or potentially may include City as a defendant. City assumes no obligation or liability by such notice but has the right (but not the duty) to monitor the handling of any such claim or claims if they are likely to involve City.

b) In the event of any loss that is not insured due to the failure of Tenant to comply with these requirements, Tenant agrees to be personally responsible for any and all losses, claims, suits damages, defense obligations and liability of any kind assessed or attributed to City, or City's employees as a result of such failure.

c) Tenant agrees to require all contractors, subcontractors or parties, including architects or others, with which it enters into contracts or hires pursuant to or related in any way with the performance of this Lease, to provide insurance covering the operations contracted for and naming as additional insureds all parties to this Lease. Tenant agrees to monitor and review all such coverage and assumes all responsibility for ensuring that such coverage is provided as required here.

d) Insurance requirements shall be applied uniformly to all Tenants engaged in similar-type operations at the Airport, and such requirements shall be consistent with industry standards.

13.02 **Indemnification**. Tenant and City agree that City, its Council, boards and commissions, officers, employees, agents, and volunteers, should, to the extent permitted by law, be fully protected from any loss, injury, damage, claim, lawsuits, cost, expense, attorney's fees, litigation costs, defense costs, court costs or any other cost arising out of or in any way related to the matters set forth below.

Accordingly, the provisions of this indemnity provision are intended by the parties to be interpreted and construed to provide the fullest protection possible under the law to City. Tenant acknowledges that City would not enter into this Lease in the absence of the commitment from Tenant to indemnify and protect City as set forth here.

To the full extent permitted by law, Tenant shall defend, indemnify and hold harmless City, its Council, boards and commissions, officers, employees, agents, and volunteers, from any liability, claims, suits, actions, arbitration proceedings, administrative proceedings, regulatory proceedings, losses, expenses or costs of any kind, whether actual, alleged or threatened, actual attorney fees incurred by City, court costs, interest, defense costs, including expert witness fees and any other costs or expenses of any kind whatsoever without restriction or limitation incurred in relation to, as a consequence of or arising out of or in any way attributable actually, allegedly or impliedly, in whole or in part to (i) the intentional act or negligence of Tenant or Tenant's employees, agents, contractors, subcontractors or invitees, (ii) any breach or default in performance of any obligation to be performed by Tenant under this Lease, or (iii) the occupancy of the Premises by Tenant and the operation of Tenant's business thereon. All obligations under this provision are to be paid by Tenant upon receipt of notice by Tenant from City that City has suffered or incurred the same.

Without affecting the rights of City under any provision of this Lease or this section, Tenant shall not be required to indemnify, defend or hold harmless City as set forth above to the extent liability is attributable to the sole negligence, gross negligence or willful misconduct of City, or officers, employees, agents, contractors, subcontractors, tenants, subtenants or volunteers of City, provided such is determined by agreement between the parties or the findings of a court of competent jurisdiction. This exception will apply only in instances where City is shown to have been solely or grossly negligent or to have engaged in willful misconduct and not in instances where Tenant is solely or partially at fault, or in instances where City's fault account for only a percentage of the liability involved. In those instances, the obligation of Tenant will be for that portion of the liability not attributable to City's gross negligence or willful misconduct.

Except for the indemnity obligations set forth in this Agreement, and otherwise notwithstanding anything to the contrary in this Agreement, Tenant and Landlord each waives any claims that each may have against the other with respect to consequential, incidental or special damages, however caused, based on any theory of liability.

Tenant agrees to obtain executed indemnity agreements with provisions identical to those set forth in this Article from any assignee, contractor, subcontractor or any other person or entity involved by, for, with or on behalf of Tenant in the performance of Tenant's obligations under this Lease. In the event Tenant fails to obtain such indemnity from such third parties, as required here, Tenant agrees to be fully responsible according to the terms of this section.

Failure of City to monitor compliance with these requirements imposes no additional obligations on City and will in no way act as a waiver of any rights hereunder. This obligation to indemnify and defend City as set forth herein is binding on the successors and assigns of Tenant and shall survive the termination of this Lease or this Article.

ARTICLE 14. LIENS & CLAIMS

14.01 **Liens and Claims**. Tenant shall not suffer or permit to be enforced against City's title to the leased Premises, or any part thereof, any lien, claim or demand arising from any work of construction, repair, restoration, maintenance or removal as herein provided, or otherwise arising (except liens, claims or demands suffered by or arising from the actions of City).

14.02 **Tenant to Pay Liens & Claims**. Tenant shall pay all such liens, claims and demands before any action is brought to enforce same against said land; and Tenant agrees to hold City and said land free and harmless from all liability for any and all such liens, claims or demands, together with all costs and expenses in connection therewith.

14.03 **Payment of Liens & Claims by City**. Should Tenant fail or refuse to pay any lien, claim, or demand arising out of the construction, repair, restoration maintenance and use of said Premises and the buildings and improvements thereon, or any other claim, charge or demand which Tenant has agreed to pay under the covenants of this Lease, Tenant or its authorized encumbrancers, if any, shall, within thirty (30) days written notice from City to Tenant of its said encumbrance, pay and discharge the same or shall furnish to City, in a form satisfactory to City, sufficient security for such lien, claim or demand and all costs and expenses in connection therewith. Should Tenant or its said encumbrancer within said thirty (30) day period, not pay and discharge said lien, claim or demand, or not provide said security to City, then City may, at its option, either treat such failure or refusal as a breach of or default under this Lease, or may pay any such lien, claim, charge or demand, or settle or discharge any action therefore or judgment thereon, and all costs, expenses and other sums incurred or paid by City in connection therewith shall be repaid to City by Tenant upon written demand, together with interest thereon at the rate of 10%, per annum from the date of payment until repaid, and any default in such repayment shall constitute a breach of the covenants and conditions of this Lease.

ARTICLE 15. TRANSFERS & ENCUMBRANCES

15.01 **Sales, Assignments, Transfers, Subleases, and Encumbrances**. Tenant shall not sell, assign, transfer, or encumber this Lease, any interest of Tenant in and to the leased Premises, nor sublease the leased Premises, in whole or in part, except with the consent of City, which consent shall not be unreasonably withheld. Tenant acknowledges and understands that the leased Premises are restricted to aviation/aeronautical-related uses unless a non-aviation/non aeronautical use is approved by both City and the FAA. Neither shall this Lease, nor any interest of Tenant in and to the leased Premises be subject to an involuntary sale, assignment or transfer, or sale, assignment or transfer by operation of law in any manner whatsoever. Any such sale, assignment, transfer, encumbrance or sublease, whether voluntary or involuntary shall be void and of no effect and shall be a default which entitles City to terminate this Lease, Tenant's rights in and to the leased Premises, in the manner hereinafter provided by this Lease. City will have the right to assign this Lease or its interest in the Premises and its rights herein, in whole or in part, without Tenant's consent. Upon notification to Tenant of such assignment, City will be relieved of all future performance, liabilities and obligations

under this Agreement to the extent of such assignment.

15.02 **Tenant Affiliate**. Notwithstanding the provisions of §15.01, Tenant may assign or sublet the Premises, or any portion thereof, with City's consent to any corporation which controls, is controlled by or is under common control with Tenant, or to any corporation resulting from the merger or consolidation with Tenant, or to any person or entity which acquires all the assets of Tenant as a going concern of the business that is being conducted on the Premises, provided that said assignee assumes, in full, the obligations of Tenant under this Lease. Any such assignment shall not, in any way, affect or limit the liability of Tenant under the terms of this Lease even if after such assignment or subletting the terms of this Lease are materially changed or altered without the consent of Tenant, the consent of whom shall not be necessary.

15.03 **No Release of Tenant**. Regardless of City's consent, no subletting or assignment shall release Tenant of Tenant's obligation or alter the primary responsibility of Tenant to pay the rent and to perform all other obligations to be performed by Tenant under this Lease. The acceptance of rent by City shall not be deemed consent to any subsequent assignment or subletting. In the event of default by any assignee of Tenant or any successor of Tenant in the performance of any of the terms hereof, City may proceed directly against Tenant without the necessity of exhausting remedies against said assignee. City may consent to subsequent assignments or subletting of this Lease or amendments or modifications to this Lease with assignees of Tenant without notifying Tenant, and without obtaining his consent thereto and such action shall not relieve Tenant of liability under this Lease.

ARTICLE 16. HAZARDOUS SUBSTANCES

16.01 **Hazardous Materials**. "Hazardous Materials" shall include substances defined as "hazardous substances," "hazardous materials," "toxic substances" or "hazardous wastes" in the Comprehensive Environmental Response, Compensation and Liability Act of 1980, as amended, 42 U.S.C. §9601, et seq.; the Hazardous Materials Transportation Act, , the Resources Conservation and Recovery Act; all environmental laws of the State of California, and any other environmental law, regulation or ordinance now existing or hereinafter enacted.

16.02 **Hazardous Materials Study**. Prior to, or following its occupancy of the Premises, Tenant may, at its sole cost and expense, arrange for a Hazardous Materials study of the leased property. City shall provide Tenant any documents, drawings and data in its possession relating to environmental analysis of the leased property. Tenant and City agree that, upon occupancy, City shall have no further obligation under this Lease to remove any Hazardous Materials in or on the leased property, including any required repairs identified in any study Tenant may choose to make, prior to, or after Tenants occupancy of the leased Premises.

16.03 **Hazardous Substances**. Pursuant to Health and Safety Code §25359.7(b), as amended, Tenant shall notify City in writing within a reasonable time, of any material release of Hazardous Materials and of any hazardous substances that have come to be located beneath the Airport. Tenant will comply with all applicable Hazardous Materials laws and such other reasonable rules, regulations and safeguards as may be required by the City (or any insurance carrier of the City) in connection with using, generating, manufacturing, refining, producing, processing, storing or disposing of Hazardous Materials on, under of about the leased Premises. Tenant shall, at its expense, procure, maintain in effect and comply with all conditions of any and all permits, license and other governmental and

regulatory approvals required for the storage and use by Tenant of Hazardous Materials on the Premises including, without limitation, discharge of (appropriately treated) materials or wastes into or through any sanitary sewer serving Building 524.

16.04 **Removal**. Prior to the expiration of this Lease, Tenant shall at its sole expense, remove all items of personal property, including but not limited to all flammable substances and Hazardous Materials and wastes as defined by state or federal law at the time of the expiration of this Lease.

16.05 **Inspection of Records**. Tenant shall make available for inspection to the City, all records relating to the maintenance, release, mitigation and cleanup for any hazardous substances on the Premises.

16.06 **Notice**. Upon execution of this Lease, Tenant shall provide the City's Fire Department with a complete list of all Hazardous Materials used or to be used or stored on the Premises with total quantities of each Hazardous Material. Tenant shall notify City of changes in quantity of type within five (5) days of change.

16.07 **Right to Inspect**. City, in its proprietary capacity, agrees to give reasonable notice in accordance with the general laws of City, prior to entering upon and inspecting the Premises at any time.

ARTICLE 17. GENERAL PROVISIONS

17.01 **Additional Rules & Regulations**. City Manager/Airport Manager shall have the power to establish in writing such additional rules and regulations respecting operation of the Airport as are not inconsistent with provisions of this Lease or any applicable ordinances or laws, providing such rules and regulations are found to be necessary or convenient by the City Manager or designee for the operation of the Airport or the enforcement of the provisions of this Lease, the provisions of any and all applicable laws and ordinances, and the preservation of the public peace, health, safety and welfare; and Tenant shall comply with any and all such rules and regulations adopted in writing by the City Manager or designee. Tenant may within ten (10) days of Tenant's receipt of any additional rule or regulation established in writing by the City Manager or designee appeal such rule or regulation to the City Council/Airport Commission, such appeal to be heard within thirty (30) days. The decision of the City Council/Airport Commission shall be final.

17.02 **Compliance with Laws; Permits and Licenses**. Tenant's business shall be conducted and maintained in strict compliance with all applicable laws, ordinances, regulations, and other requirements of federal, state, county, city or other governmental agencies having jurisdiction over the operation of Airports. Similarly, Tenant will obtain and pay for any necessary permits, licenses and other consents for the operation of Tenant's business including a City of Marina Business License. Tenant represents and warrants that it is duly organized, validly existing and in good standing and has full power, right, and authority to enter into this Lease and perform hereunder and holds all permits and licenses which are required by law or regulation for complete performance in accordance with the terms of this Lease.

17.03 **Independent Status**. Tenant is an independent entity. Tenant is solely responsible for the acts and omissions of its officers, agents, employees, contractors and subcontractors, if any.

Nothing in this Lease shall be construed as creating a partnership or joint venture between City and Tenant. Neither Tenant nor its officers, employees, agents or subcontractors shall obtain any rights to retirement or other benefits which accrue to City employees.

17.04 **Dispute Resolution**. The parties agree that if any dispute arises over the interpretation or performance of this Lease, the parties will first attempt to negotiate any such dispute informally. If such informal negotiation fails, and if the parties mutually agree at the time, the parties may then submit the dispute for formal mediation to the American Arbitration Association (AAA) or the Judicial Arbitration and Mediation Services (JAMS), or such other mediation service as the parties may mutually agree upon. Expenses of such mediation shall be shared equally between the parties.

17.05 **Confidentiality**. To the extent allowed by law, City shall not disclose Tenant's financial statement or confidential financial condition. Tenant acknowledges that City is a municipal corporation and has limited powers to withhold information from the public.

17.06 **Attorney's Fees and Costs**. Should the dispute of the parties not be resolved by negotiation or mediation, and in the event it should become necessary for either party to enforce or interpret any of the terms and conditions of this Lease by means of court action or administrative enforcement the laws of the State of California shall govern the interpretation of the terms and conditions of this Lease and such action shall be brought in a court of proper jurisdiction in Monterey County, the prevailing party, in addition to any other remedy at law or in equity available to such party, shall be awarded all reasonable costs and reasonable attorney's fees in connection therewith, including the fees and costs of experts reasonable consulted by the attorneys for the prevailing party. Prevailing party means the party determined by the court to have most prevailed even if such party did not prevail in all matters. This provisions will not be construed to entitle any party other than City, Tenant or Tenant Affiliate to recover their fees and expenses.

17.07 **Litigation Involving Lease**. In the event City is made a party to any litigation concerning this Lease or the leased Premises by reason of any act or omission by Tenant, Tenant shall hold City harmless from all loss or liability, including reasonable attorney's fees, incurred by City in such litigation. In case suit shall be brought for an unlawful detainer of said Premises, for the recovery of any rent due under the provisions of this Lease, or because of the breach of any other covenant or provision herein contained on the part of Tenant to be kept or performed, and City prevails therein, Tenant shall pay to City a reasonable attorney's fee, which shall be fixed by the court. EACH PARTY, TO THE EXTENT PERMITTED BY LAW, KNOWINGLY, VOLUNTARILY AND INTENTIONALLY WAIVES ITS RIGHT TO A TRIAL BY JURY IN ANY ACTION OR PROCEEDING UNDER ANY THEORY OF LIABILITY ARISING OUT OF OR IN ANY WAY CONNECTED WITH THIS LEASE OR THE TRANSACTIONS IT CONTEMPLATES.

17.08 **Bankruptcy and Insolvency**. If Tenant shall, at any time during the term of this Lease, become insolvent, or if proceedings in bankruptcy shall be instituted by or against Tenant, or if Tenant shall be adjudged bankrupt or insolvent by any court, or if a receiver or trustee in bankruptcy or a receiver of any property of Tenant shall be appointed in any suit or proceeding brought by or against Tenant, or if Tenant shall make any assignment for the benefit of creditors, then in each and every case, this Lease and the rights and privileges granted hereunder shall immediately cease, terminate and be forfeited and canceled; provided, however, that if Tenant shall, within six (6) days after the filing

and service on Tenant of any involuntary petition in bankruptcy or for appointment of a receiver, commence proper proceedings to dismiss or deny the petition or vacate the receivership and shall expeditiously pursue and diligently exhaust all proper remedies toward that end, the bankruptcy or receivership shall not constitute a default until the entry of a final determination adverse to Tenant.

17.09 **Eminent Domain**. In the event of a total or partial taking of the leased Premises or any interest therein by a public authority under the power of eminent domain, including but not limited to any taking of Tenant's leasehold estate by City under City's power of eminent domain, then the rights of Tenant with respect to the term, rent, and the just compensation awarded in such eminent domain proceeding shall be in accordance with the law in effect when such taking occurs.

17.10 **No Relocation Benefits**. This Lease creates no rights under the California Government Code Sections 7260 to 7277 or the Federal Uniform Relocation Assistance Act for Tenant to receive relocation assistance upon termination of this Lease.

17.11 **Force Majeure; Waiver**. Tenant shall not be in default under this Lease in the event that the activities of Tenant are temporarily interrupted for any of the following reasons: riots; war or national emergency declared by the President or Congress and affecting the City; sabotage; civil disturbance; insurrection; explosion; natural disasters such as floods, earthquakes, landslides and fires; strikes, lockouts and other labor disturbances; or other catastrophic events which are beyond the reasonable control of Tenant. "Other catastrophic events" does not include the financial ability of Tenant to perform or failure of Tenant to obtain any necessary permits or licenses from other governmental agencies or the right to use facilities of any public entity where such failure occurs because Tenant has failed to exercise reasonable diligence. It is understood and agreed to by Tenant that the Tennant cannot, and will not, claim force majeure or request that the time for commencement of construction or completion of the improvements be tolled the based on an economic downturn of any type. If such Force Majeure event prevents the affected Party from performing its obligations under this Lease, in whole or in part, for a period of forty-five (45) or more days, then the other Party may terminate this Lease immediately upon Notice to the affected Party.

17.12 **Abandonment**. Tenant shall not vacate or abandon the leased Premises or any part thereof at any time during the term of this Lease. If Tenant shall abandon, vacate or surrender the leased Premises or be dispossessed by process of law or otherwise, any property belonging to Tenant and left on the leased Premises shall be deemed, at the option of City, to be abandoned. Upon relinquishing possession, Tenant shall be in default of this Lease and City shall be entitled to terminate this Lease, Tenant's rights in and to the leased Premises in the manner hereinafter provided by this Lease.

17.13 **Default**. Tenant shall be deemed in default under this Lease:

a) Upon breach of any of the covenants and conditions of this Lease with respect to discrimination on the grounds of race, creed, color, national origin, or sex, economic discrimination, the sale, assignment, transfer, encumbrance, or subletting of the leased Premises which is the subject matter of this Lease, bankruptcy or insolvency of Tenant; or, with respect to any other covenant or condition of this Lease, which breach cannot be cured, immediately upon being given notice thereof by City.

b) Upon failure to pay any rent or any other consideration required under this Lease to be paid by Tenant to City within fifteen (15) days following written notice to Tenant of Tenant's failure to pay rent when due.

c) Upon failure to provide written evidence of the insurance when due, within fourteen (14) days after being given notice thereof by City.

d) Upon the breach of any of Tenant's other duties and obligations under this Lease, which breach can be cured, if such breach is not cured within thirty (30) days after being given written notice thereof by City. No such failure, however, will be deemed to exist if Tenant has commenced to cure such default within such period and provided that such efforts are prosecuted to completion with reasonable diligence. Delay in curing a default will be excused if due to causes beyond the reasonable control of Tenant. If Tenant remains in default beyond any applicable cure period, then City will have the right to exercise any and all rights and remedies available to it under law and equity.

e) City Default. City shall be deemed in default under this Lease if City fails to perform obligations required of City under this Lease within thirty (30) days after written notice by Tenant to City specifying wherein City has failed to perform such obligation; provided, however, that if the nature of City's obligation is such that more than thirty (30) days are required for its cure, then City shall not be in default if City commences performance within such thirty (30) day period and thereafter diligently pursues the same to conclusion.

17.14 **Remedies on Default**.

a) City's Right to Terminate Lease. Upon default of this Lease, the non-defaulting Party shall have the right, without further notice, to terminate this Lease as well as Tenant's rights in and to the leased Premises, and Tenant shall begin removing Tenant's Facilities in accordance with Section 10 of this Lease.

b) City's Right to Perform. Notwithstanding any provisions as to notice of default in this Lease to the contrary, if, in City's judgment, a continuance of any default by Tenant for the full period of the notice otherwise provided for will jeopardize the leased Premises, including any improvements thereon or facilities appurtenant thereto, or the rights of City, City may, without notice, elect to perform those acts in respect of which Tenant is in default at Tenant's expense and Tenant shall thereupon reimburse City, with interest at the rate of 10% per annum, upon thirty (30) days' written notice by City to Tenant.

c) Other Remedies. All rights, options, and remedies of the Parties contained in this Lease shall be construed and held to be cumulative and not one of them shall be exclusive of the other, and City shall have the right to pursue any one or all of such remedies or any other remedy or relief which may be provided for by law, whether or not stated in this Lease.

17.15 **Waiver of Default**. Any waiver by City of a default of this Lease arising out of the breach of any of the covenants, conditions, or restrictions of this Lease shall not be construed or held to be a waiver of any succeeding or preceding default arising out of a breach of the same or any other

covenant, condition, or restriction of this Lease.

17.16 **City's Right of Entry**. Tenant shall permit City and any agents and employees of City to enter in and upon the leased Premises at all reasonable times for the purpose of inspecting the same, or for the purpose of posting notices of non-responsibility for improvements, alterations, additions, or repairs, without any rebate of rent and without any liability to Tenant for any loss of occupation or quiet enjoyment of the leased Premises thereby occasioned.

17.17 **Notices**. All notices, requests, or demands hereunder required or permitted to be given under this Lease shall be in writing and shall be personally delivered or sent by facsimile or by United States certified mail, postage prepaid, return receipt requested, or by a nationally recognized courier, postage prepaid, addressed as follows:

To City: City of Marina
City Hall
Attention: City Manager/Airport Manager
211 Hillcrest Avenue
Marina, California 93933
Fax Number: (831) 384-0425

Copy to:

To Tenant:

or to such other address as either party may from time-to-time designate by notice to the other given in accordance with this section. Notice shall be deemed effective on the date personally served or sent by facsimile or, if mailed, three (3) business days from the date such notice is deposited in the United States mail. Either party may change the place for giving notice to it by thirty (30) days' prior written notice to the other party as provided herein.

17.18 **Authority**. Each Party represents, warrants, and covenants that the undersigned has the right and authority to execute and perform this Agreement.

17.19 **Amendment or Modification**. This Lease may be amended, altered or modified only by a writing specifying such amendment, alteration or modification, executed by authorized representatives of both of the parties hereto. In the event that the FAA requires, as a condition precedent to granting of funds for the improvement of the Airport, modifications or changes to this Lease, Tenant agrees to consent in writing upon the request of City to such reasonable amendments, modifications, revisions, supplements or deletions of any of the terms, conditions, or requirements of the Lease as may be reasonably required to enable City to obtain FAA funds, provided that in no event shall such changes materially impair the rights of Tenant hereunder. A failure by Tenant to so consent shall constitute a breach of this Lease.

17.20 **Construction of Lease**. Whenever the singular number is used in this Lease and when required by the context, the same shall include the plural, and the masculine gender shall include the feminine and neuter genders. If there shall be more than one Tenant designated in or signatory to this Lease, the obligations hereunder imposed upon Tenant shall be joint and several; and the term

"Tenant" as used herein shall refer to each and every of said signatory parties, severally as well a jointly.

17.21 **Covenant & Condition**. Each term and provision of this Lease performable by Tenant shall be construed to be both a covenant and a condition.

17.22 **Time**. Time is and shall be of the essence of each term and provision of this Lease.

17.23 **Material Breach**. Each and every term, condition, covenant and provision of this Lease is and shall be deemed to be a material part of the consideration for City's entry into this Lease, and any breach hereof by Tenant shall be deemed to be a material breach.

17.24 **Heirs, Successors and Assigns**. All of the covenants, agreements, conditions and undertakings herein contained shall, subject to the provisions as to assignments, apply to and bind the representatives, heirs, executor, administrators, successors or assigns of all the parties hereto; and all the parties hereto shall be jointly and severally liable hereunder.

17.25 **Further Actions**. Each of the parties agree to execute and deliver to the other such documents and instruments, and to take such actions, as may reasonably be required to give effect to the terms and conditions of this Lease.

17.26 **Interpretation**. This Lease has been negotiated by and between the representatives of both parties. Accordingly, any rule of law (including Civil Code §1654) or legal decision that would require interpretation of any ambiguities in this Lease against the party that has drafted it is not applicable and is waived. The provisions of this Lease shall be interpreted in a reasonable manner to affect the purpose of the parties and this Lease.

17.27 **Captions**. Titles or captions of articles and sections contained in this Lease are inserted only as a matter of convenience and for reference, and in no way define, limit, extend or describe the scope of this Lease or the intent of any provision of it.

17.28 **Severability**. If any of the provisions of this Lease are determined to be invalid or unenforceable, those provisions shall be deemed severable from the remainder of this Lease and shall not cause the invalidity or unenforceability of the remainder of this Lease, unless this Lease without the severed provisions would frustrate a material purpose of either party in entering into this Lease.

17.29 **Waiver**. No waiver of any right or obligation of either party hereto shall be effective unless made in writing, specifying such waiver and executed by the party against whom such waiver is sought to be enforced. A waiver by either party of any of its rights under this Lease on any occasion shall not be a bar to the exercise of the same right on any subsequent occasion or of any other right at any time.

17.30 **Counterparts**. This Lease may be executed in two counterparts, each of which shall be deemed an original, but both of which shall be deemed to constitute one and the same instrument.

17.31 **Exhibits Incorporated**. All exhibits reference in this Lease and attached to it are hereby incorporated in it by this reference. In the event there is a conflict between any of the terms of this

Lease and any of the terms of any exhibit to the Lease, the terms of the Lease shall control the respective duties and liabilities of the parties.

17.32 **Entire Agreement**. This Lease constitutes the entire and complete agreement between the parties regarding the subject matter hereof, and supersedes all prior or contemporaneous negotiations, understandings or agreements of the parties, whether written or oral, with respect to the subject matter.

IN WITNESS WHEREOF, this Lease has been executed by the duly authorized officers or representatives of each of the parties on the date first shown above.

CITY OF MARINA, a municipal corporation	DISH Wireless L.L.C a Colorado limited liability company
By:_____ Layne Long, City Manager	By:_____
Dated: _____	Dated: _____

(Pursuant to Reso. 2022-___)

ATTEST:

_____
City Clerk

APPROVED AS TO FORM:

_____
City Attorney

EXHIBITS

[TO BE ADDED]

EXHIBIT A

PLAT SHOWING LOCATION OF BUILDING 524 WITH LEASE AREA AND NON-EXCLUSIVE EASEMENT AREA

EXHIBIT B

PLAN SET DEPICTING DISH TELCOMMUNICATIONS FACILITY IMPROVEMENTS

EXHIBIT C

CITY INSURANCE STANDARDS

EXHIBIT D

FAA ASSURANCES

EXHIBIT E

ARMY CORPS OF ENGINEERS' ASBESTOS SURVEY FOR BUILDING 524

Exhibit A

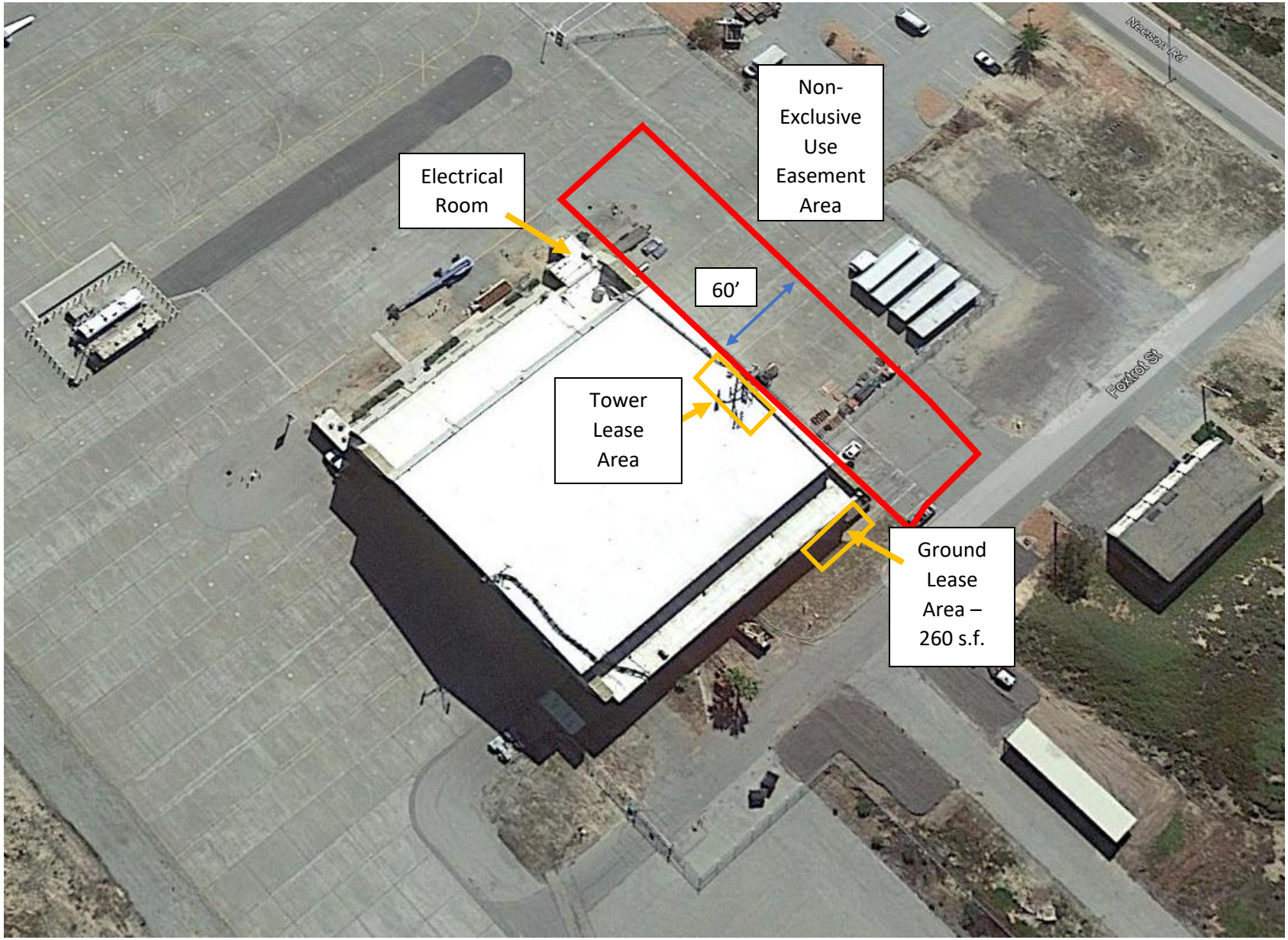
Non-Exclusive Use Easement Area
Electrical Room
60'
Tower Lease Area
Ground Lease Area – 260 s.f.
Foxtrot St

dish WIRELESS

DISH WIRELESS SITE ID:

SFSFO01108B

SITE ADDRESS:

761 NEESON RD.
MARINA, CA 93933

SCOPE OF WORK

THIS IS NOT AN ALL INCLUSIVE LIST. CONTRACTOR SHALL UTILIZE SPECIFIED EQUIPMENT PART OR ENGINEER APPROVED EQUIVALENT. CONTRACTOR SHALL VERIFY ALL NEEDED EQUIPMENT TO PROVIDE A FUNCTIONAL SITE. THE PROJECT GENERALLY CONSISTS OF THE FOLLOWING:

SECTOR SCOPE OF WORK:
- INSTALL (3) PROPOSED 6'-0" PANEL ANTENNAS (1 PER SECTOR)
- INSTALL (6) PROPOSED RRUs (2 PER SECTOR)
- INSTALL (1) PROPOSED SURGE SUPPRESSION DEVICE
- INSTALL (6) PROPOSED POWER CABLES (2 PER SECTOR)
- INSTALL (6) PROPOSED FIBER CABLES (2 PER SECTOR)
- INSTALL (1) 1.411"ø HYBRID CABLE
- INSTALL (24) 1/2"ø JUMPERS, (3) RET CABLES TO RRU'S

EQUIPMENT SCOPE OF WORK:
- INSTALL (1) PROPOSED BBU IN CABINET
- INSTALL (1) PROPOSED EQUIPMENT CABINET
- INSTALL (1) PROPOSED POWER CONDUIT
- INSTALL (1) PROPOSED TELCO CONDUIT
- INSTALL (1) PROPOSED NEMA 3 TELCO-FIBER BOX
- INSTALL CAMLOCK GEN LUG INTERSECT AT GROUND LEVEL
- INSTALL (1) METER SOCKET
- REMOVE ALL EXISTING ABANDONED CABINETS & EQUIPMENT

SITE INFORMATION

PROPERTY OWNER:	CITY OF MARINA
ADDRESS:	211 HILLCREST AVENUE MARINA, CA 93933
CONTACT:	JEFF CRECHRIOU 831-241-8628 jcrechrious@cityofmarina.org
SITE TYPE:	ROOFTOP
COUNTY:	MONTEREY
LATITUDE (NAD 83):	36.678817
LONGITUDE (NAD 83):	-121.764022
ZONING JURISDICTION:	CITY OF MARINA
ZONING DISTRICT:	TBD
PARCEL NUMBER:	031-112-018-000
OCCUPANCY GROUP:	TBD
CONSTRUCTION TYPE:	TBD
POWER COMPANY:	PG&E
FIBER COMPANY:	AT&T

PROJECT DIRECTORY

APPLICANT:	DISH WIRELESS 5701 SOUTH SANTA FE DRIVE LITTLETON, CO 80120
SITE DESIGNER:	CONNELL DESIGN GROUP 22431 ANTONIO PKWY., SUITE B160-131 RANCHO SANTA MARGARITA, CA 92688 DAN CONNELL (949) 306-4644
SITE ACQUISITION:	BUTLER 1511 E. ORANGETHORPE AVE., SUITE D FULLERTON, CA 92831 JAKE WOOTEN

CALIFORNIA - CODE COMPLIANCE

ALL WORK SHALL BE PERFORMED AND MATERIALS INSTALLED IN ACCORDANCE WITH THE CURRENT EDITIONS OF THE FOLLOWING CODES AS ADOPTED BY THE LOCAL GOVERNING AUTHORITIES. NOTHING IN THESE PLANS IS TO BE CONSTRUED TO PERMIT WORK NOT CONFORMING TO THESE CODES:

CODE TYPE	CODE
BUILDING	2019 CALIFORNIA BUILDING CODE (CBC)/2018 IBC
MECHANICAL	2019 CALIFORNIA MECHANICAL CODE (CMC)/2018 UMC
ELECTRICAL	2019 CALIFORNIA ELECTRICAL CODE (CEC)/2017 NEC

SITE PHOTO

DIRECTIONS

DIRECTIONS FROM SFO AIRPORT:
- HEAD SOUTH, KEEP LEFT, FOLLOW SIGNS FOR US-101 S/SAN JOSE AND MERGE ONTO US-101 S
- TAKE EXIT 336 FOR CA-156 W TOWARD MONTEREY/PENINSULA
- CONTINUE ONTO CA-156 W
- CONTINUE ONTO CA-1 S
- TAKE EXIT 414 FOR MOLERA RD/NASHUA RD
- TURN RIGHT ONTO MOLERA RD
- CONTINUE ONTO NASHUA RD
- CONTINUE ONTO COOPER RD
- TURN RIGHT ONTO W BLANCO RD
- USE THE RIGHT 2 LANES TO TURN RIGHT ONTO RESERVATION RD
- TURN RIGHT ONTO IMJIN RD
- TURN LEFT ONTO NEESON RD
- TURN RIGHT ONTO FOXTROT ST
- DESTINATION WILL BE ON THE RIGHT

SHEET INDEX

SHEET NO.	SHEET TITLE
T-1	TITLE SHEET
LS-1	SITE SURVEY
LS-2	SITE SURVEY
A-1	OVERALL SITE PLAN AND EQUIPMENT PLAN
A-2	ROOF PLAN
A-3	EQUIPMENT PLANS, ANTENNA PLANS AND SCHEDULE
A-4	ELEVATIONS
A-5	ELEVATIONS
D-1	EQUIPMENT DETAILS
D-2	EQUIPMENT DETAILS
D-3	EQUIPMENT DETAILS
E-1	S.L.D., PANEL SCHEDULE & NOTES
E-2	ELECTRICAL DETAILS
G-1	GROUNDING PLAN AND NOTES
G-2	GROUNDING DETAILS
RF-1	RF DATA
GN-1	GENERAL NOTES
GN-2	GENERAL NOTES
GN-3	GENERAL NOTES
GN-4	GENERAL NOTES

UNDERGROUND SERVICE ALERT
UTILITY NOTIFICATION CENTER OF CALIFORNIA
(800) 422-4133
WWW.CALIFORNIA811.ORG

CALL 2-14 WORKING DAYS UTILITY NOTIFICATION PRIOR TO CONSTRUCTION

811

GENERAL NOTES

THE FACILITY IS UNMANNED AND NOT FOR HUMAN HABITATION. A TECHNICIAN WILL VISIT THE SITE AS REQUIRED FOR ROUTINE MAINTENANCE. THE PROJECT WILL NOT RESULT IN ANY SIGNIFICANT DISTURBANCE OR EFFECT ON DRAINAGE. NO SANITARY SEWER SERVICE, POTABLE WATER, OR TRASH DISPOSAL IS REQUIRED AND NO COMMERCIAL SIGNAGE IS PROPOSED.

11"x17" PLOT WILL BE HALF SCALE UNLESS OTHERWISE NOTED

CONTRACTOR SHALL VERIFY ALL PLANS, EXISTING DIMENSIONS, AND CONDITIONS ON THE JOB SITE, AND SHALL IMMEDIATELY NOTIFY THE ENGINEER IN WRITING OF ANY DISCREPANCIES BEFORE PROCEEDING WITH THE WORK.

VICINITY MAP

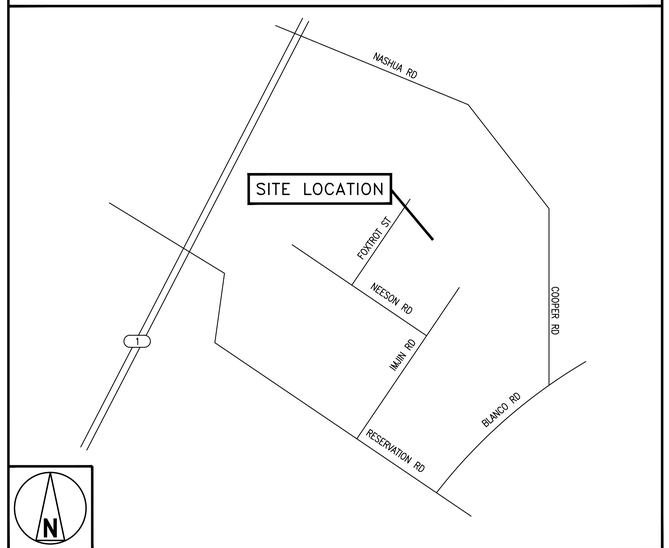

NO SCALE

dish WIRELESS
5701 SOUTH SANTA FE DRIVE
LITTLETON, CO 80120

BUTLER America Telecom LLC
1511 E. ORANGETHORPE AVE., SUITE D
FULLERTON, CA 92831

CDG
22431 ANTONIO PKWY
SUITE B160-131
RANCHO SANTA MARGARITA CA 92688
dconnell@connelldesigngroup.com
949-306-4644

REGISTERED PROFESSIONAL ENGINEER
DANIEL MICHAEL CONNELL
NO. 62543
EXP. 12/31/23
CIVIL
STATE OF CALIFORNIA

DATE STAMPED: 08/12/2022

IT IS A VIOLATION OF LAW FOR ANY PERSON, UNLESS THEY ARE ACTING UNDER THE DIRECTION OF A LICENSED PROFESSIONAL ENGINEER, TO ALTER THIS DOCUMENT.

DRAWN BY:	CHECKED BY:	APPROVED BY:
LE	JPC	DC

RFDS REV #1 DATED 04/05/2022

CONSTRUCTION DOCUMENTS

SUBMITTALS

REV	DATE	DESCRIPTION
A	07/25/2022	ISSUED FOR 90% CD REVIEW
0	08/11/2022	ISSUED FOR 90% CD REVIEW

(VENDOR) PROJECT NUMBER
SFSF001108B

DISH WIRELESS PROJECT NUMBER
SFSF001108B

761 NEESON RD.
MARINA, CA 93933
ROOFTOP

SHEET TITLE
TITLE SHEET

SHEET NUMBER
T-1

Exhibit B to Lease

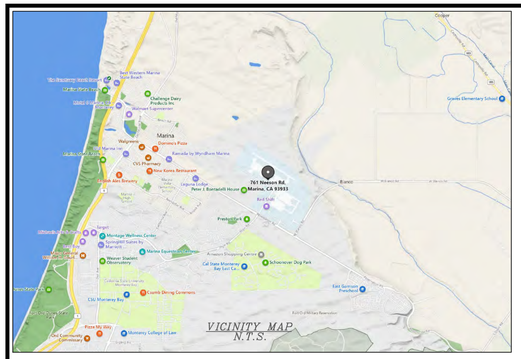

SURVEY DATE
03/23/2022

BASIS OF BEARING
BEARINGS SHOWN HEREON ARE BASED UPON U.S. STATE PLANE NAD83 COORDINATE SYSTEM CALIFORNIA STATE PLANE COORDINATE ZONE THREE, DETERMINED BY GPS OBSERVATIONS.

BENCHMARK
PROJECT ELEVATIONS ESTABLISHED FROM GPS DERIVED ORTHOMETRIC HEIGHTS BY APPLICATION OF NGS 'GEOID 18' MODELED SEPARATIONS TO ELLIPSOID HEIGHTS DETERMINED BY OBSERVATIONS OF THE 'CRTN' REAL TIME NETWORK. ALL ELEVATIONS SHOWN HEREON ARE REFERENCED TO NAVD88.

FLOOD ZONE
THIS PROJECT APPEARS TO BE LOCATED WITHIN FLOOD ZONE "X". ACCORDING TO FEDERAL EMERGENCY MANAGEMENT AGENCY FLOOD INSURANCE RATE MAP(S), MAP ID #06053C0195H, DATED 06/21/2017

UTILITY NOTES
SURVEYOR DOES NOT GUARANTEE THAT ALL UTILITIES ARE SHOWN OR THEIR LOCATIONS ARE DEFINITE. IT IS THE RESPONSIBILITY OF THE CONTRACTOR AND DEVELOPER TO CONTACT 811 AND ANY OTHER INVOLVED AGENCIES TO LOCATE ALL UTILITIES PRIOR TO CONSTRUCTION. REMOVAL, RELOCATION AND/ OR REPLACEMENT IS THE RESPONSIBILITY OF THE CONTRACTOR.

SURVEYOR'S NOTES
SURVEYOR HAS NOT PERFORMED A SEARCH OF PUBLIC RECORDS TO DETERMINE ANY DEFECT IN TITLE ISSUED.
THE BOUNDARY SHOWN HEREON IS PLOTTED FROM RECORD INFORMATION AND DOES NOT CONSTITUTE A BOUNDARY SURVEY OF THE PROPERTY.
ALL DISTANCES SHOWN HEREON ARE GRID DISTANCES.
CONTOURS DERIVED FROM DIRECT FIELD OBSERVATIONS AND FOLLOWS THE CURRENT NATIONAL MAP STANDARDS FOR VERTICAL ACCURACY.

LESSOR LEGAL DESCRIPTION
TAX PARCEL NO. 031-112-018-000

LEGEND
These standard symbols will be found in the drawing.

- TRUNCATED DOME
- CONCRETE
- GRAVEL
- FENCE
- OVERHEAD LINE
- PROPERTY LINE
- CENTERLINE
- EASEMENT
- DECIDUOUS TREE
- PALM TREE
- MAILBOX
- MANHOLE TELEPHONE
- FIRE HYDRANT
- GUY WIRE
- MANHOLE ELECTRIC
- POWER POLE
- GPS
- WOOD POST
- SIGN
- WATER VALVE
- ANTENNA
- HIGH POINT
- SPOT GRADE
- PARKING LOT LIGHT
- PULLBOX ELECTRIC
- MANHOLE SEWER
- BLOWOFF VALVE
- GROUND ROD
- WATER METER
- GAS METER
- GAS VALVE
- BOLLARD
- POST INDICATOR VALVE
- SQUARE INLET
- HANDICAP SYMBOL
- FC FACE OF CURB
- TW TOP OF WALL
- NG NATURAL GROUND
- EOC EDGE OF CONCRETE
- EOP EDGE OF PAVEMENT
- SCO SEWER CLEANOUT

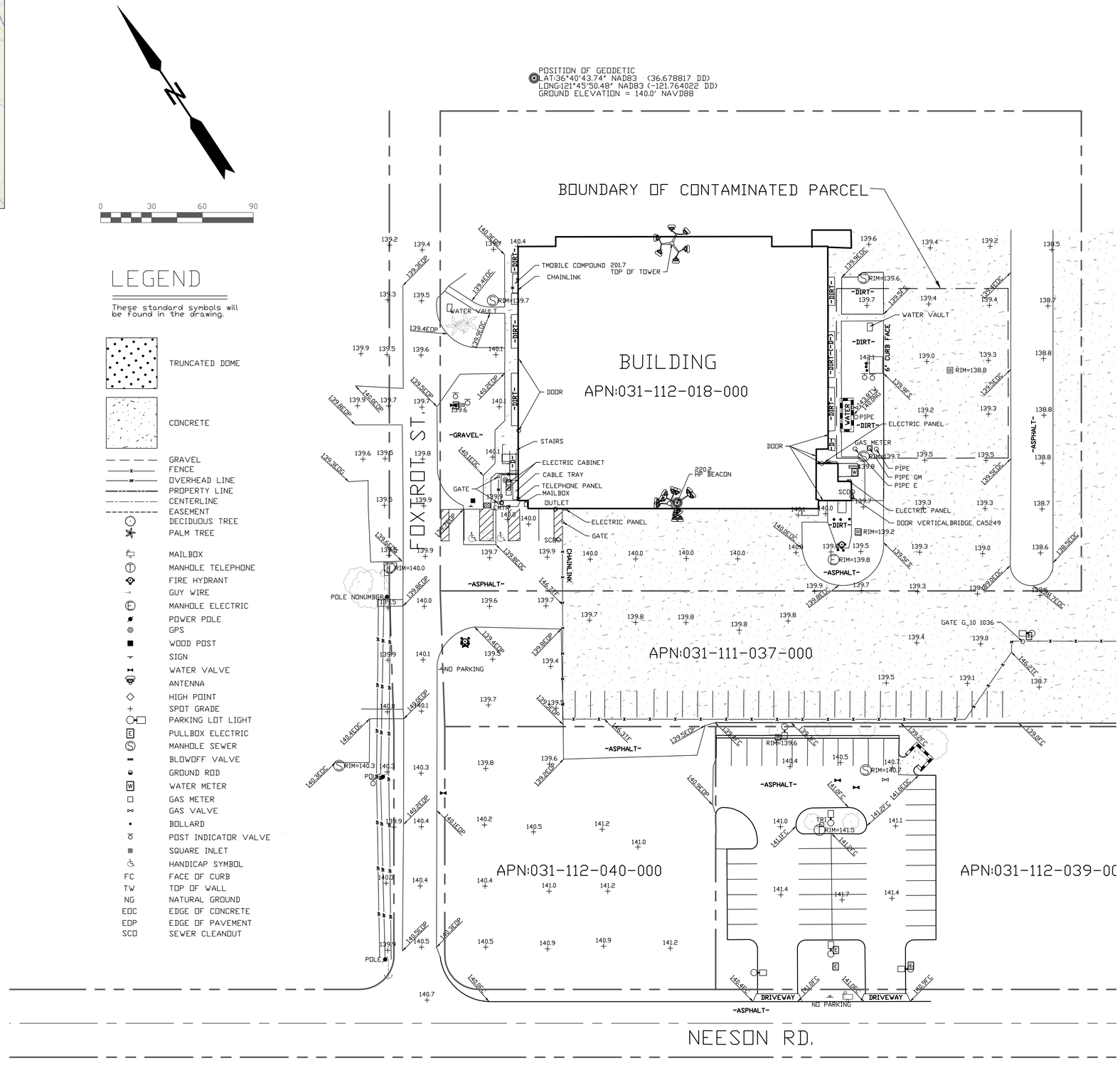

Exhibit B to Lease

dish wireless

5701 SOUTH SANTA FE DRIVE
LITTLETON, CO 80120

Eaton Land Surveying, Inc.
15604 Magnolia Rd.
Grass Valley, CA. 95949
Ph. 530.830.0038

DRAWN BY:	HE
CHECKED BY:	SE

REVISIONS:

REV	DATE	DESCRIPTION
0	03/31/22	SUBMITTAL

LICENSED LAND SURVEYOR
SHAWN M. EATON
#8644
STATE OF CALIFORNIA
EXP. 12/31/23

PROJECT INFORMATION:

SFSFO01108B

761 NEESON RD.
MARINA, CA. 993933
MONTEREY COUNTY

SHEET TITLE:

SITE SURVEY

SHEET NUMBER:

LS-1

Exhibit B to Lease

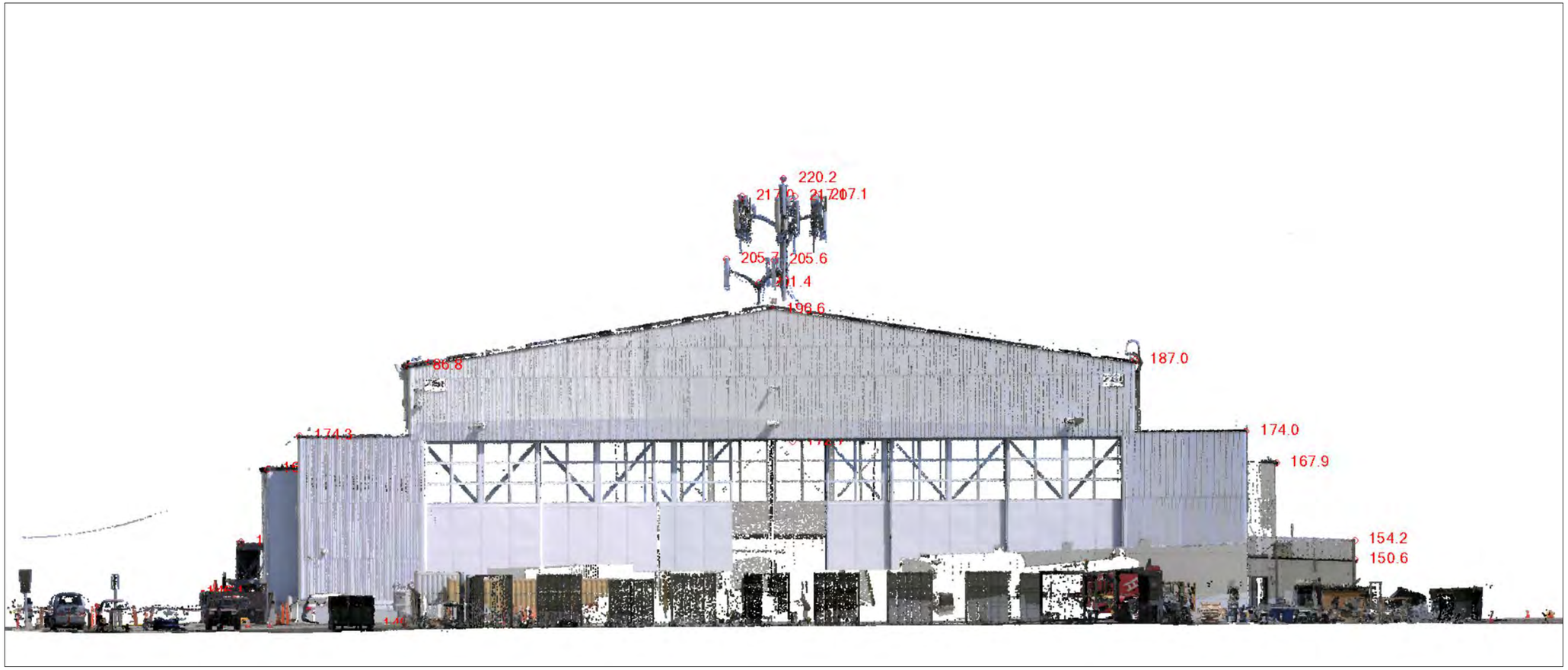

BUILDING DETAIL

dish wireless

5701 SOUTH SANTA FE DRIVE
LITTLETON, CO 80120

Eaton Land Surveying, Inc.
15604 Magnolia Rd.
Grass Valley, CA. 95949
Ph. 530.830.0038

DRAWN BY:	HE
CHECKED BY:	SE

REVISIONS:

REV	DATE	DESCRIPTION
0	03/31/22	SUBMITTAL

LICENSED LAND SURVEYOR
SHAWN M. EATON
#8644
STATE OF CALIFORNIA
EXP. 12/31/23

PROJECT INFORMATION:

SFSFO01108B

761 NEESON RD.
MARINA, CA. 993933
MONTEREY COUNTY

SHEET TITLE:

SITE SURVEY

SHEET NUMBER:

LS-1

Exhibit B to Lease

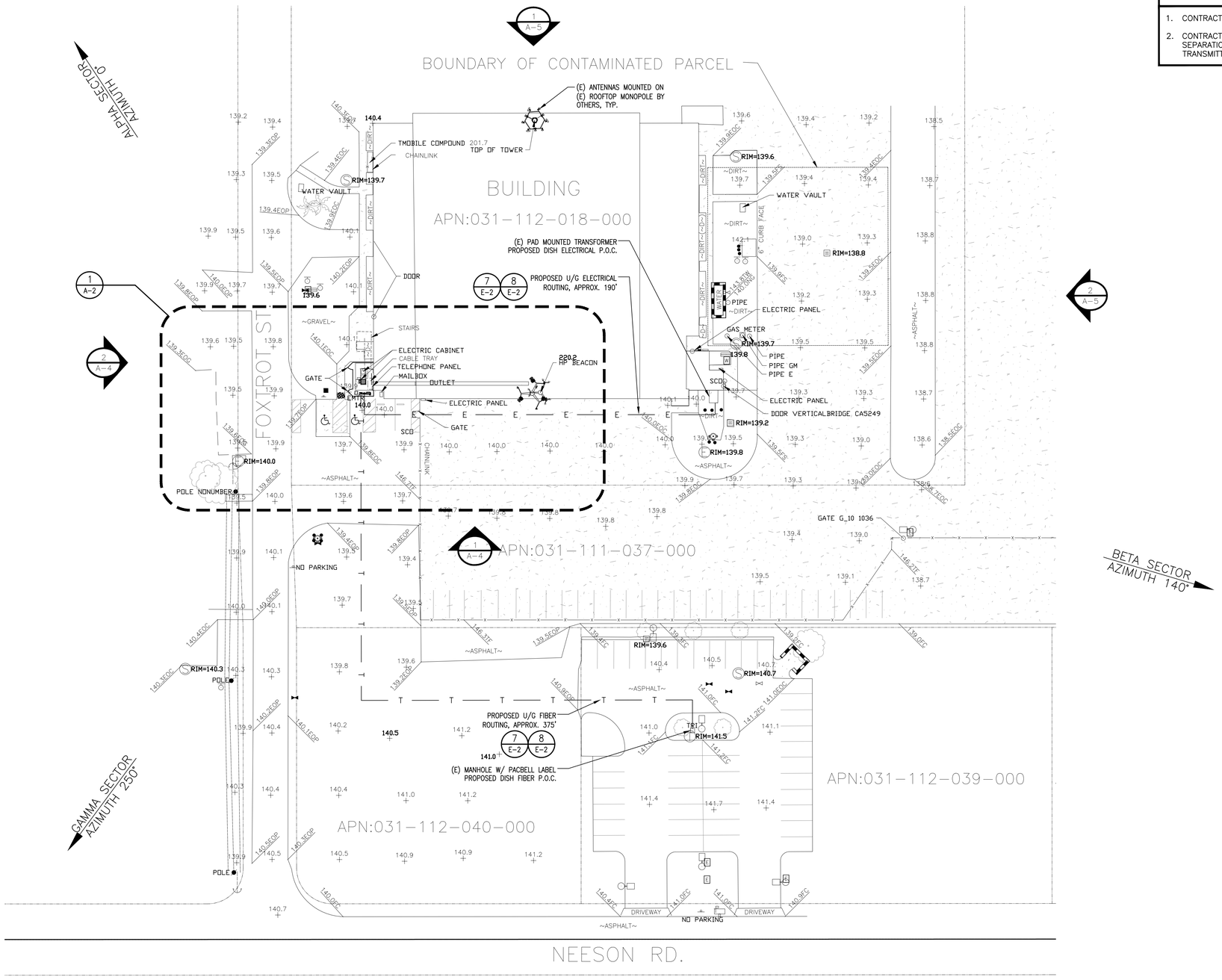

NOTES

1. CONTRACTOR SHALL FIELD VERIFY ALL DIMENSIONS.
2. CONTRACTOR SHALL MAINTAIN A 10'-0" MINIMUM SEPARATION BETWEEN THE PROPOSED GPS UNIT, TRANSMITTING ANTENNAS AND EXISTING GPS UNITS.

OVERALL SITE PLAN

30' 20' 10' 0 30' 60'
1"=30'

1

dish WIRELESS
5701 SOUTH SANTA FE DRIVE
LITTLETON, CO 80120

BUTLER America Telecom LLC
1511 E. ORANGETHORPE AVE., SUITE D
FULLERTON, CA 92831

CDG
22431 ANTONIO PKWY
SUITE B160-131
RANCHO SANTA MARGARITA CA 92688
dconnell@connelldesigngroup.com
949-306-4644

REGISTERED PROFESSIONAL ENGINEER DANIEL MICHAEL CONNELL NO. 62543 EXP. 12/31/23 CIVIL STATE OF CALIFORNIA

DATE STAMPED: 08/12/2022

IT IS A VIOLATION OF LAW FOR ANY PERSON, UNLESS THEY ARE ACTING UNDER THE DIRECTION OF A LICENSED PROFESSIONAL ENGINEER, TO ALTER THIS DOCUMENT.

DRAWN BY:	CHECKED BY:	APPROVED BY:
LE	JPC	DC

RFDS REV #1 DATED 04/05/2022

CONSTRUCTION DOCUMENTS

SUBMITTALS

REV	DATE	DESCRIPTION
A	07/25/2022	ISSUED FOR 90% CD REVIEW
0	08/11/2022	ISSUED FOR 90% CD REVIEW

(VENDOR) PROJECT NUMBER
SFSF001108B

DISH WIRELESS PROJECT NUMBER
SFSF001108B

761 NEESON RD.
MARINA, CA 93933
ROOFTOP

SHEET TITLE
OVERALL SITE PLAN

SHEET NUMBER
A-1

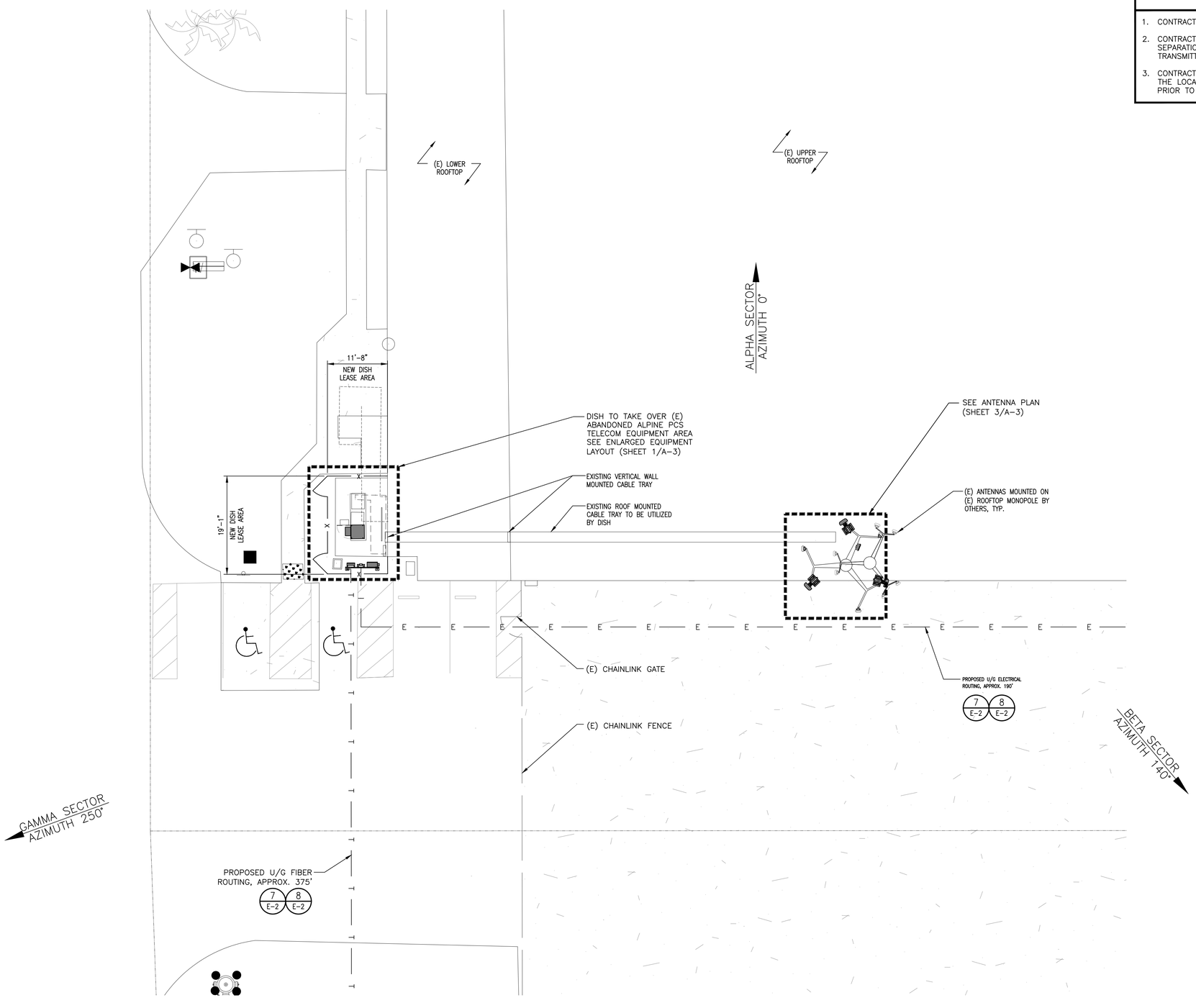

ROOF PLAN

10' 0 10' 20'
1"=10'

1

NOTES

1. CONTRACTOR SHALL FIELD VERIFY ALL DIMENSIONS.
2. CONTRACTOR SHALL MAINTAIN A 10'-0" MINIMUM SEPARATION BETWEEN THE PROPOSED GPS UNIT, TRANSMITTING ANTENNAS AND EXISTING GPS UNITS.
3. CONTRACTOR TO VERIFY WITH DISH WIRELESS C.M. THE LOCATION OF THE POWER AND FIBER SOURCE PRIOR TO CONSTRICTION.

dish WIRELESS
5701 SOUTH SANTA FE DRIVE
LITTLETON, CO 80120

BUTLER America Telecom LLC
1511 E. ORANGETHORPE AVE., SUITE D
FULLERTON, CA 92831

CDG
22431 ANTONIO PKWY
SUITE B160-131
RANCHO SANTA MARGARITA CA 92688
dconnell@connelldesigngroup.com
949-306-4644

REGISTERED PROFESSIONAL ENGINEER
DANIEL MICHAEL CONNELL
NO. 62543
EXP. 12/31/23
CIVIL
STATE OF CALIFORNIA

DATE STAMPED: 08/12/2022

IT IS A VIOLATION OF LAW FOR ANY PERSON, UNLESS THEY ARE ACTING UNDER THE DIRECTION OF A LICENSED PROFESSIONAL ENGINEER, TO ALTER THIS DOCUMENT.

DRAWN BY:	CHECKED BY:	APPROVED BY:
LE	JPC	DC

RFDS REV #1 DATED 04/05/2022

CONSTRUCTION DOCUMENTS

SUBMITTALS

REV	DATE	DESCRIPTION
A	07/25/2022	ISSUED FOR 90% CD REVIEW
0	08/11/2022	ISSUED FOR 90% CD REVIEW

(VENDOR) PROJECT NUMBER
SFSF001108B

DISH WIRELESS PROJECT NUMBER
SFSF001108B

761 NEESON RD.
MARINA, CA 93933
ROOFTOP

SHEET TITLE
ROOF PLAN

SHEET NUMBER
A-2

NOTES

1. CONTRACTOR SHALL FIELD VERIFY ALL DIMENSIONS.
2. ANTENNA AND MW DISH SPECIFICATIONS REFER TO ANTENNA SCHEDULE AND TO FINAL CONSTRUCTION RFDS FOR ALL RF DETAILS
3. ANTENNAS AND EQUIPMENT SHALL BE PAINTED TO MATCH EXISTING BUILDING.

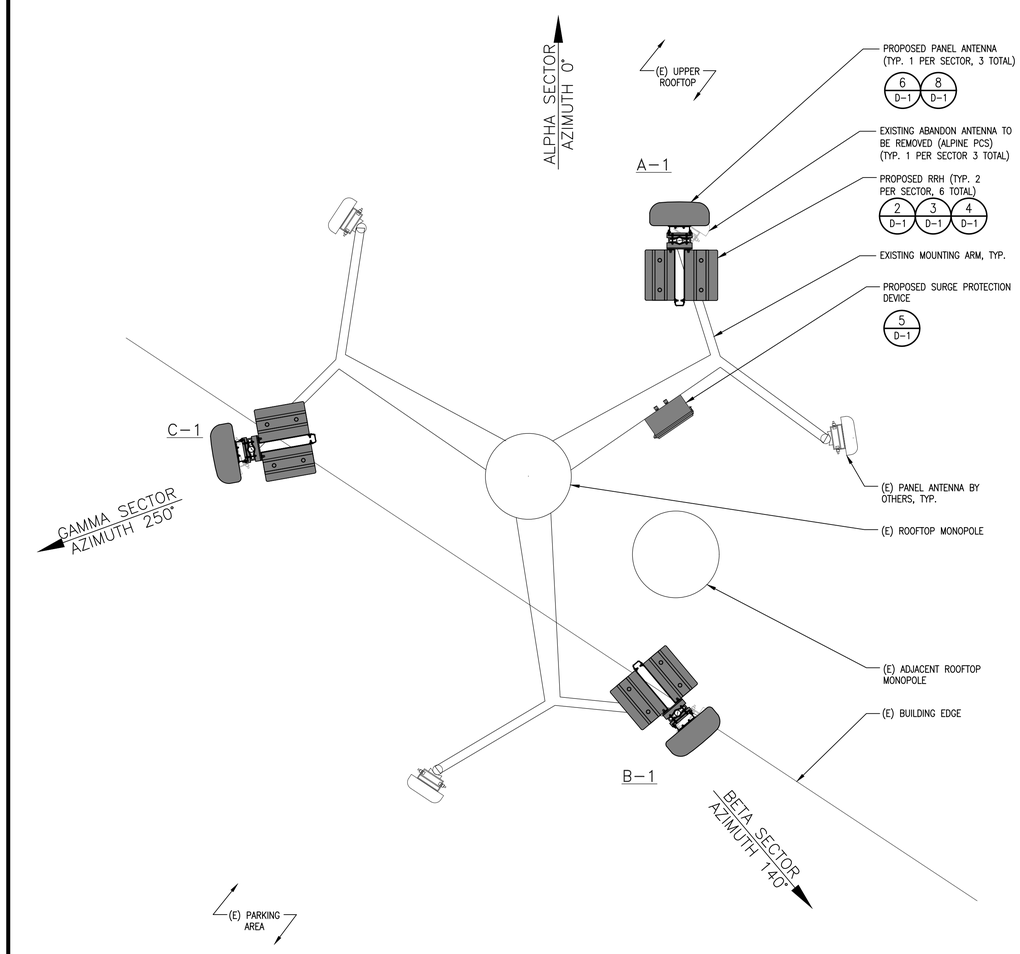

ANTENNA LAYOUT

12" 6" 0 1' 2' 3' 4' 5'
1/2"=1'-0"

3

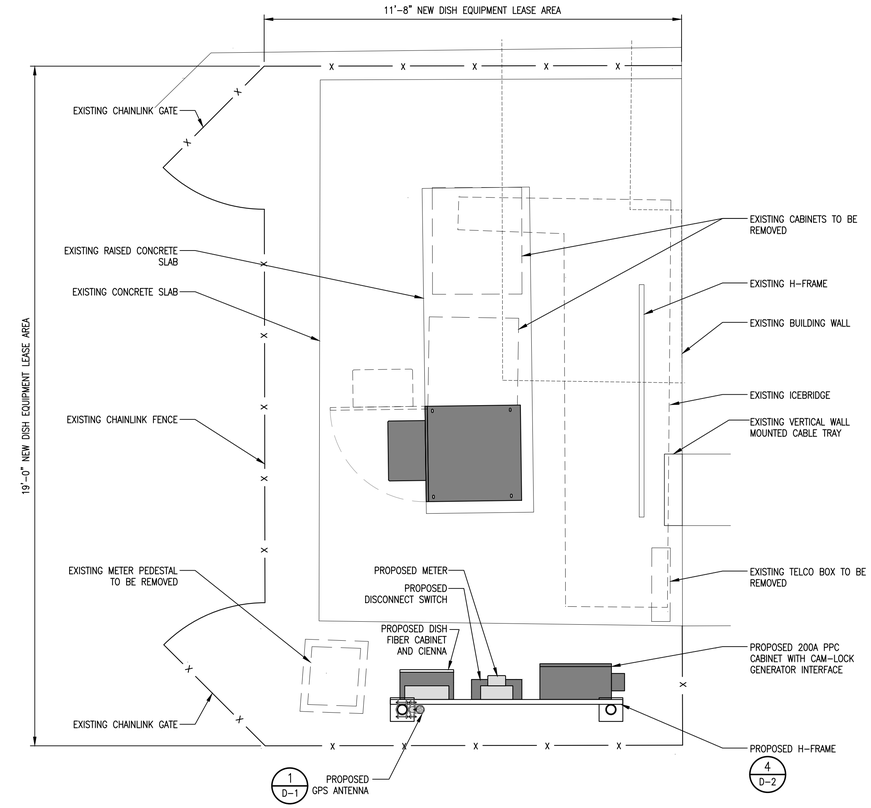

EQUIPMENT LAYOUT

12" 6" 0 1' 2' 3' 4' 5'
1/2"=1'-0"

1

SECTOR	ANTENNA						RADIO			
	POSITION	EXISTING OR PROPOSED	MANUFACTURER – MODEL NUMBER SIZE (HxWxD)	AZIMUTH	RAD CENTER	TRANSMISSION CABLE FEED LINE TYPE AND LENGTH	POSITION	EXISTING OR PROPOSED	MANUFACTURER – MODEL NUMBER SIZE (HxWxD)	TRANSMISSION CABLE FEED LINE TYPE AND LENGTH
ALPHA	A1	PROPOSED	JMA–MX08FRO665–21 72"x20"x8"	0°	62'–0"	COAX JUMPERS (±6' LONG)	A1	PROPOSED	MTI G2021–50–02B 16.93"x13.89"x11.1"	(1) HIGH–CAPACITY HYBRID CABLE (150' LONG)
							A1	PROPOSED	MTI G2021–49–02B 16.93"x13.89"x9.84"	
BETA	B1	PROPOSED	JMA–MX08FRO665–21 72"x20"x8"	140°	62'–0"	COAX JUMPERS (±6' LONG)	B1	PROPOSED	MTI G2021–50–02B 16.93"x13.89"x11.1"	
							B1	PROPOSED	MTI G2021–49–02B 16.93"x13.89"x9.84"	
GAMMA	C1	PROPOSED	JMA–MX08FRO665–21 72"x20"x8"	250°	62'–0"	COAX JUMPERS (±6' LONG)	C1	PROPOSED	MTI G2021–50–02B 16.93"x13.89"x11.1"	
							C1	PROPOSED	MTI G2021–49–02B 16.93"x13.89"x9.84"	

NOTES

1. CONTRACTOR TO REFER TO FINAL CONSTRUCTION RFDS FOR ALL RF DETAILS.
2. ANTENNA OR RRH MODELS MAY CHANGE DUE TO EQUIPMENT AVAILABILITY. ALL EQUIPMENT CHANGES MUST BE APPROVED AND REMAIN IN COMPLIANCE WITH THE PROPOSED DESIGN AND STRUCTURAL ANALYSES.

ANTENNA SCHEDULE

NO SCALE

2

dish WIRELESS
5701 SOUTH SANTA FE DRIVE
LITTLETON, CO 80120

BUTLER America Telecom LLC
1511 E. ORANGETHORPE AVE., SUITE D
FULLERTON, CA 92831

CDG
22431 ANTONIO PKWY
SUITE B160–131
RANCHO SANTA MARGARITA CA 92688
dconnell@connelldesigngroup.com
949–306–4644

REGISTERED PROFESSIONAL ENGINEER
DANIEL MICHAEL CONNELL
NO. 62543
EXP. 12/31/23
CIVIL
STATE OF CALIFORNIA

DATE STAMPED: 08/12/2022

IT IS A VIOLATION OF LAW FOR ANY PERSON, UNLESS THEY ARE ACTING UNDER THE DIRECTION OF A LICENSED PROFESSIONAL ENGINEER, TO ALTER THIS DOCUMENT.

DRAWN BY:	CHECKED BY:	APPROVED BY:
LE	JPC	DC

RFDS REV #1 DATED 04/05/2022

CONSTRUCTION DOCUMENTS

SUBMITTALS

REV	DATE	DESCRIPTION
A	07/25/2022	ISSUED FOR 90% CD REVIEW
0	08/11/2022	ISSUED FOR 90% CD REVIEW

(VENDOR) PROJECT NUMBER
SFSF001108B

DISH WIRELESS PROJECT NUMBER
SFSF001108B

761 NEESON RD.
MARINA, CA 93933
ROOFTOP

SHEET TITLE
EQUIP / ANTENNA PLANS, AND SCHEDULE

SHEET NUMBER
A-3

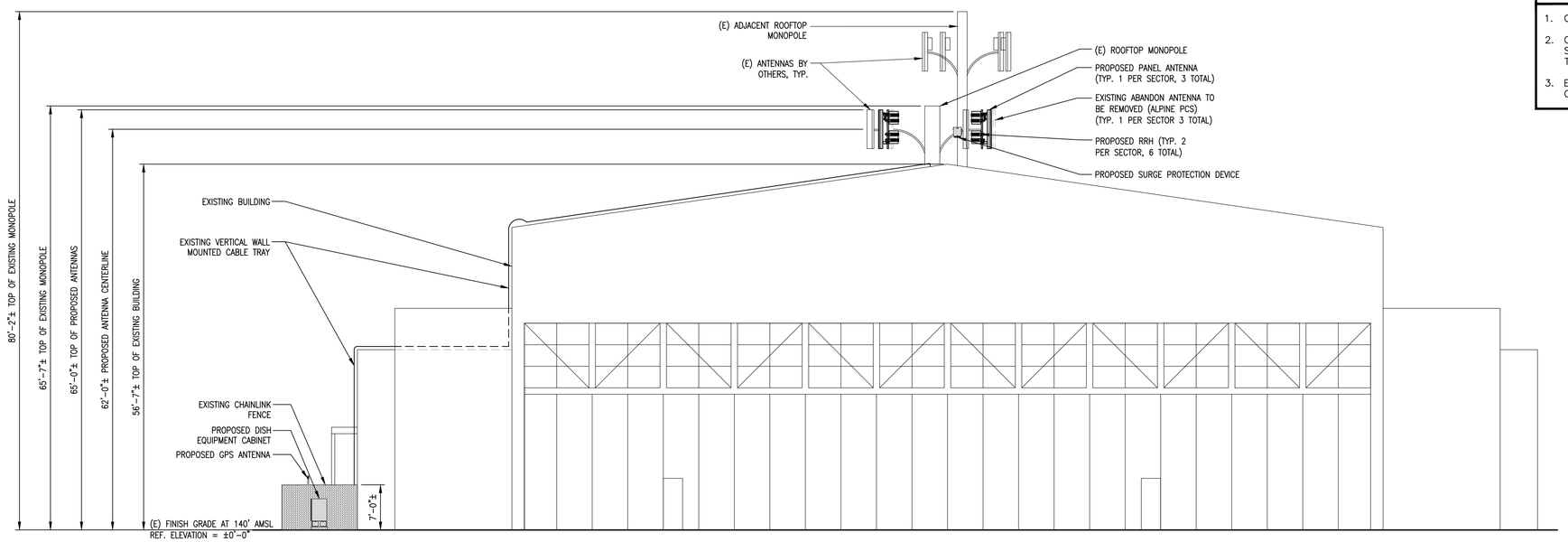

BUILDING SOUTHWEST ELEVATION

10' 0 10' 20'
1"=10'

1

NOTES

1. CONTRACTOR SHALL FIELD VERIFY ALL DIMENSIONS.
2. CONTRACTOR SHALL MAINTAIN A 10'-0" MINIMUM SEPARATION BETWEEN THE PROPOSED GPS UNIT, TRANSMITTING ANTENNAS AND EXISTING GPS UNITS.
3. EXISTING CHAIN LINK FENCE NOT SHOWN FOR CLARITY

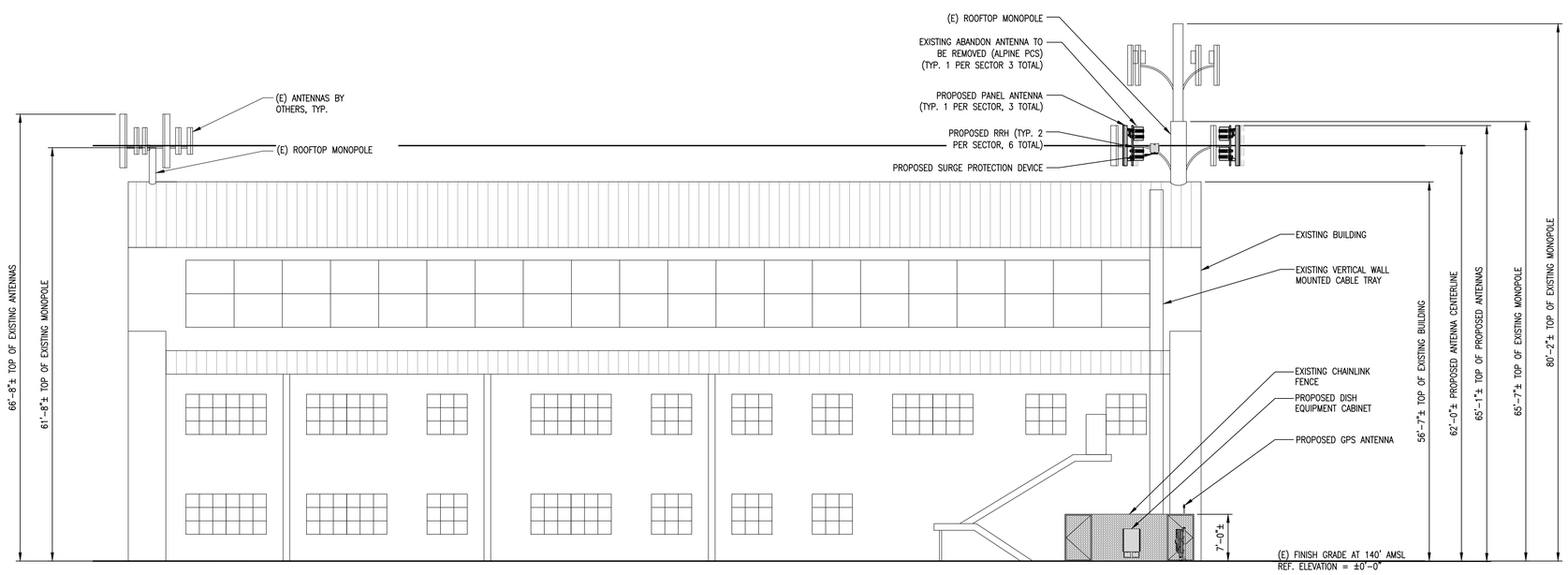

BUILDING NORTHWEST ELEVATION

10' 0 10' 20'
1"=10'

2

NOTES

1. CONTRACTOR SHALL FIELD VERIFY ALL DIMENSIONS.
2. CONTRACTOR SHALL MAINTAIN A 10'-0" MINIMUM SEPARATION BETWEEN THE PROPOSED GPS UNIT, TRANSMITTING ANTENNAS AND EXISTING GPS UNITS.
3. EXISTING CHAIN LINK FENCE NOT SHOWN FOR CLARITY

dish WIRELESS
5701 SOUTH SANTA FE DRIVE
LITTLETON, CO 80120

BUTLER America Telecom LLC
1511 E. ORANGETHORPE AVE., SUITE D
FULLERTON, CA 92831

CDG
22431 ANTONIO PKWY
SUITE B160-131
RANCHO SANTA MARGARITA CA 92688
dconnell@connelldesigngroup.com
949-306-4644

REGISTERED PROFESSIONAL ENGINEER
DANIEL MICHAEL CONNELL
NO. 62543
EXP. 12/31/23
CIVIL
STATE OF CALIFORNIA

DATE STAMPED: 08/12/2022

IT IS A VIOLATION OF LAW FOR ANY PERSON, UNLESS THEY ARE ACTING UNDER THE DIRECTION OF A LICENSED PROFESSIONAL ENGINEER, TO ALTER THIS DOCUMENT.

DRAWN BY:	CHECKED BY:	APPROVED BY:
LE	JPC	DC

RFDS REV #1 DATED 04/05/2022

CONSTRUCTION DOCUMENTS

SUBMITTALS

REV	DATE	DESCRIPTION
A	07/25/2022	ISSUED FOR 90% CD REVIEW
0	08/11/2022	ISSUED FOR 90% CD REVIEW

(VENDOR) PROJECT NUMBER
SFSF001108B

DISH WIRELESS PROJECT NUMBER
SFSF001108B

761 NEESON RD.
MARINA, CA 93933
ROOFTOP

SHEET TITLE
ELEVATIONS

SHEET NUMBER
A-4

Exhibit B to Lease

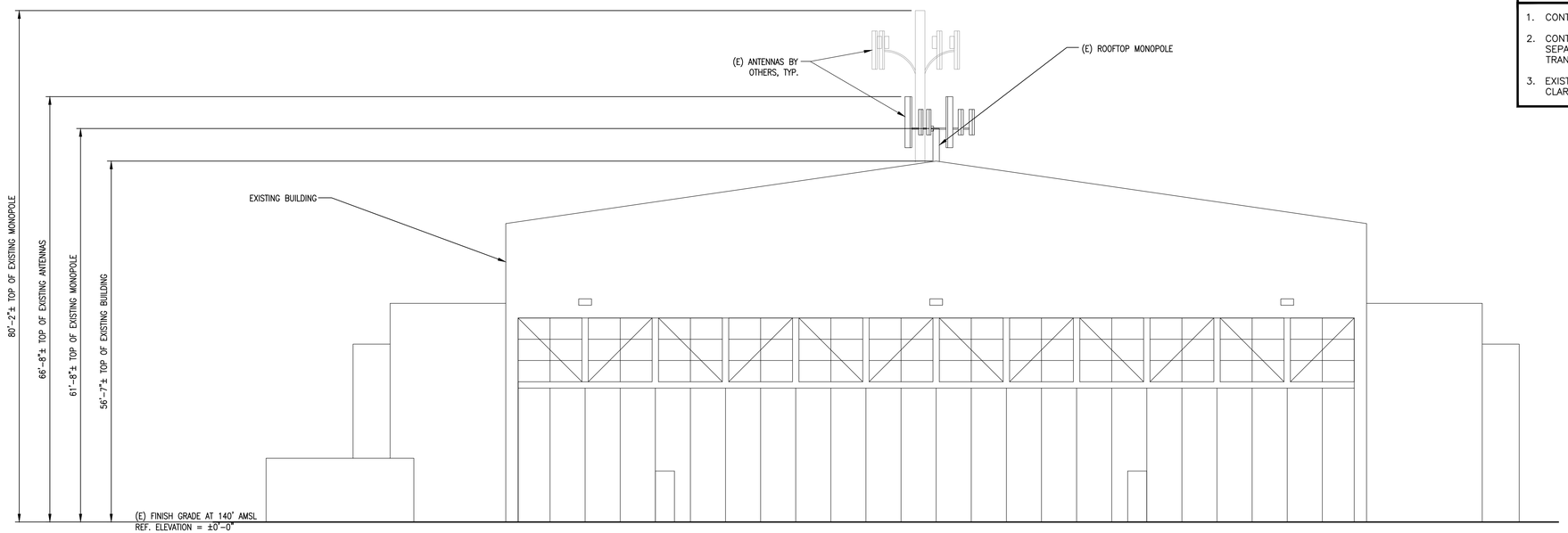

BUILDING NORTHEAST ELEVATION

10' 0 10' 20'
1"=10'

1

NOTES

1. CONTRACTOR SHALL FIELD VERIFY ALL DIMENSIONS.
2. CONTRACTOR SHALL MAINTAIN A 10'-0" MINIMUM SEPARATION BETWEEN THE PROPOSED GPS UNIT, TRANSMITTING ANTENNAS AND EXISTING GPS UNITS.
3. EXISTING CHAIN LINK FENCE NOT SHOWN FOR CLARITY

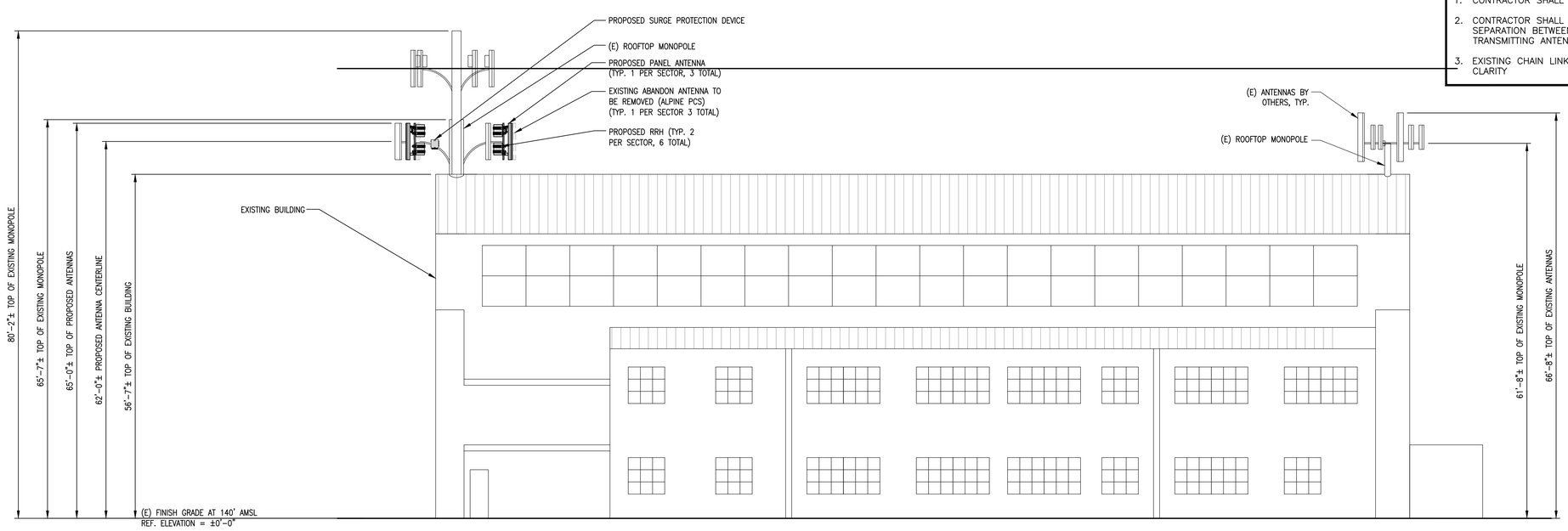

BUILDING SOUTHEAST ELEVATION

10' 0 10' 20'
1"=10'

2

NOTES

1. CONTRACTOR SHALL FIELD VERIFY ALL DIMENSIONS.
2. CONTRACTOR SHALL MAINTAIN A 10'-0" MINIMUM SEPARATION BETWEEN THE PROPOSED GPS UNIT, TRANSMITTING ANTENNAS AND EXISTING GPS UNITS.
3. EXISTING CHAIN LINK FENCE NOT SHOWN FOR CLARITY

dish WIRELESS
5701 SOUTH SANTA FE DRIVE
LITTLETON, CO 80120

BUTLER America Telecom LLC
1511 E. ORANGETHORPE AVE., SUITE D
FULLERTON, CA 92831

CDG
22431 ANTONIO PKWY
SUITE B160-131
RANCHO SANTA MARGARITA CA 92688
dconnell@connelldesigngroup.com
949-306-4644

REGISTERED PROFESSIONAL ENGINEER
DANIEL MICHAEL CONNELL
NO. 62543
EXP. 12/31/23
CIVIL
STATE OF CALIFORNIA

DATE STAMPED: 08/12/2022

IT IS A VIOLATION OF LAW FOR ANY PERSON, UNLESS THEY ARE ACTING UNDER THE DIRECTION OF A LICENSED PROFESSIONAL ENGINEER, TO ALTER THIS DOCUMENT.

DRAWN BY:	CHECKED BY:	APPROVED BY:
LE	JPC	DC

RFDS REV #1 DATED 04/05/2022

CONSTRUCTION DOCUMENTS

SUBMITTALS

REV	DATE	DESCRIPTION
A	07/25/2022	ISSUED FOR 90% CD REVIEW
0	08/11/2022	ISSUED FOR 90% CD REVIEW

(VENDOR) PROJECT NUMBER
SFSF001108B

DISH WIRELESS PROJECT NUMBER
SFSF001108B

761 NEESON RD.
MARINA, CA 93933
ROOFTOP

SHEET TITLE
ELEVATIONS

SHEET NUMBER
A-5

ROSENBERGER GPSGLONASS-36-N-S	
DIMENSION (DIA x H)	69mm x 98.5mm
WEIGHT (WITH ACCESSORIES)	515.74g
CONNECTOR	N-FEMALE
FREQUENCY RANGE	1559 MHz ~ 1610.5MHz

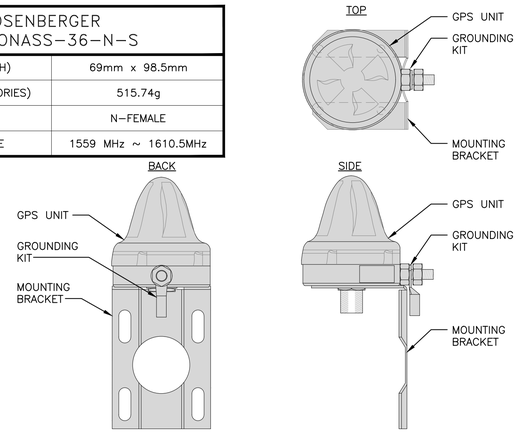

GPS ANTENNA DETAIL | NO SCALE | 1

MTI G060708-50-02B RRH	
DIMENSIONS (HxWxD) (KG/IN)	16.93"x13.89"x11.1"
TOTAL WEIGHT (KG/LB)	97.0lb
POWER SUPPLY VOLTAGE	-48Vdc (NOMINAL)

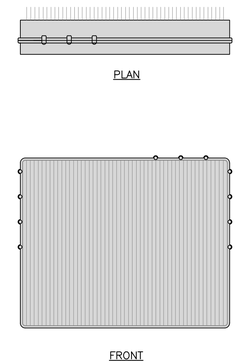

REMOTE RADIO HEAD DETAIL | NO SCALE | 2

COMMSCOPE BACK-TO-BACK MOUNT RR-FA2	
DIMENSIONS (HxWxD)	16.41"x18.0"x3.0"
WEIGHT	39.22 lb
PACKAGE QUANTITY	2

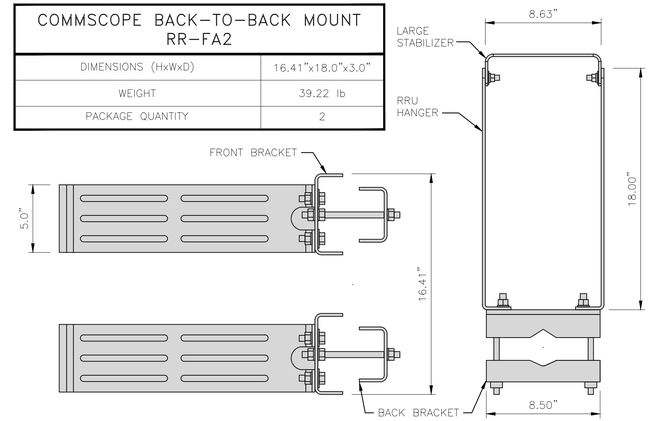

REMOTE RADIO MOUNT DETAIL | NO SCALE | 3

MTI G2021-49-02B RRH	
DIMENSIONS (HxWxD) (IN)	16.93"x13.89"x9.8"
TOTAL WEIGHT (LB)	86.0lb
POWER SUPPLY VOLTAGE	-48Vdc (NOMINAL)

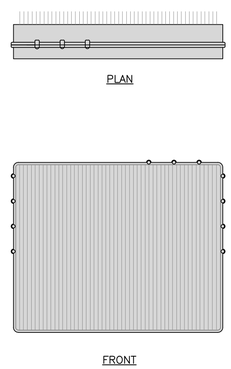

REMOTE RADIO HEAD DETAIL | NO SCALE | 4

RAYCAP RDIDC-9181-PF-48 SURGE PROTECTION DEVICE	
DIMENSIONS (HxWxD)	16" X 14" X 8"
WEIGHT	21.85 LBS

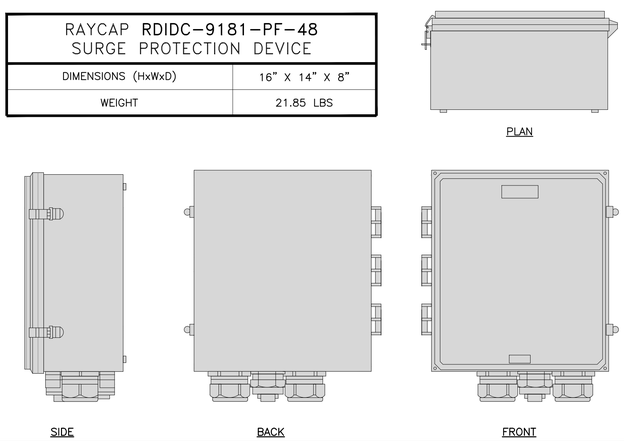

SURGE PROTECTION DEVICE DETAIL | NO SCALE | 5

JMA MX08FRO665-21	
DIMENSIONS (HxWxD)(MM/IN)	72"x20"x8.0"
TOTAL WEIGHT (kg/lb)	64.5lb
RF CONNECTOR INTERFACE	4.3-10 FEMALE

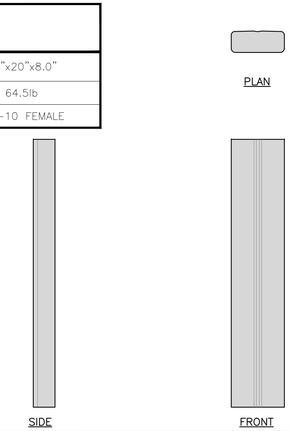

ANTENNA DETAIL | NO SCALE | 6

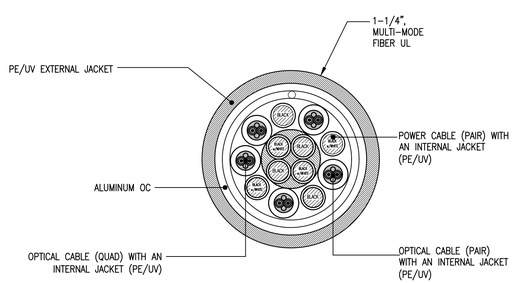

HYBRID CABLE DETAIL (FOR REFERENCE) | NO SCALE | 7

M04 MOUNTING BRACKET HPA-33R-BUU-H4-K	
WIDTH	5" (135mm)
DEPTH	2" (51mm)
HEIGHT	8" (213mm)
TOTAL WEIGHT (WITH BRACKETS)	1.5 LBS (15.50 Kg)
HOUSING MATERIAL	ASA/ABS/ALUMINUM
RADOME COLOR	LIGHT GRAY
CONNECTOR	1X8-PIN DAISY CHAIN

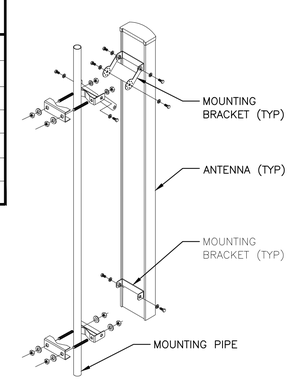

ANTENNA MOUNTING DETAIL | NO SCALE | 8

NOT USED | NO SCALE | 9

dish WIRELESS
5701 SOUTH SANTA FE DRIVE
LITTLETON, CO 80120

BUTLER America Telecom LLC
1511 E. ORANGETHORPE AVE., SUITE D
FULLERTON, CA 92831

CDG
22431 ANTONIO PKWY
SUITE B160-131
RANCHO SANTA MARGARITA CA 92688
dconnell@connelldesigngroup.com
949-306-4644

REGISTERED PROFESSIONAL ENGINEER
DANIEL MICHAEL CONNELL
NO. 62543
EXP. 12/31/23
CIVIL
STATE OF CALIFORNIA

DATE STAMPED: 08/12/2022

IT IS A VIOLATION OF LAW FOR ANY PERSON, UNLESS THEY ARE ACTING UNDER THE DIRECTION OF A LICENSED PROFESSIONAL ENGINEER, TO ALTER THIS DOCUMENT.

DRAWN BY:	CHECKED BY:	APPROVED BY:
LE	JPC	DC

RFDS REV #1 DATED 04/05/2022

CONSTRUCTION DOCUMENTS

SUBMITTALS

REV	DATE	DESCRIPTION
A	07/25/2022	ISSUED FOR 90% CD REVIEW
0	08/11/2022	ISSUED FOR 90% CD REVIEW

(VENDOR) PROJECT NUMBER
SFSF001108B

DISH WIRELESS PROJECT NUMBER
SFSF001108B

761 NEESON RD.
MARINA, CA 93933
ROOFTOP

SHEET TITLE
EQUIPMENT DETAILS

SHEET NUMBER
D-1

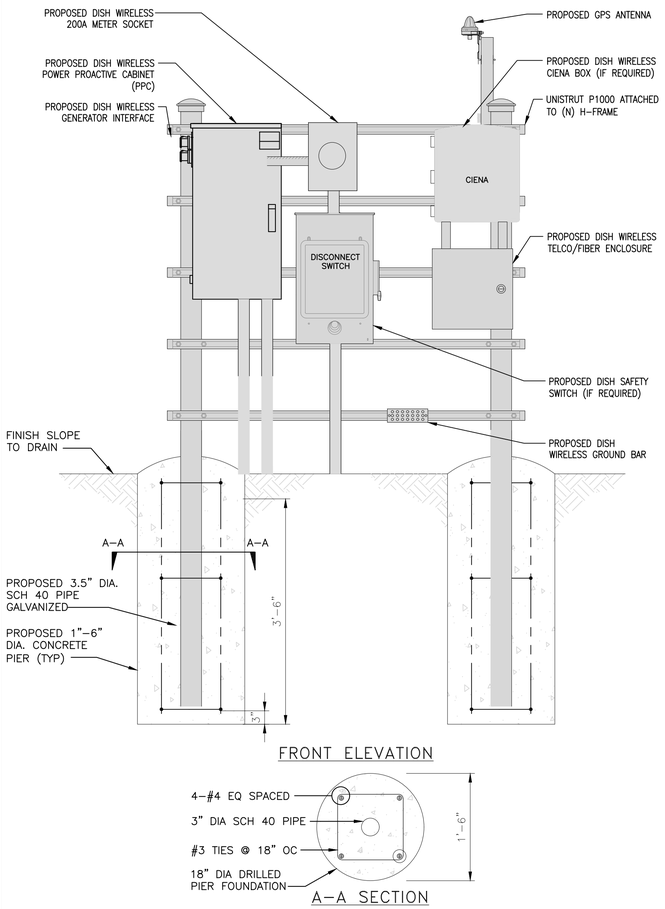

UTILITY H–FRAME DETAIL | NO SCALE | 4

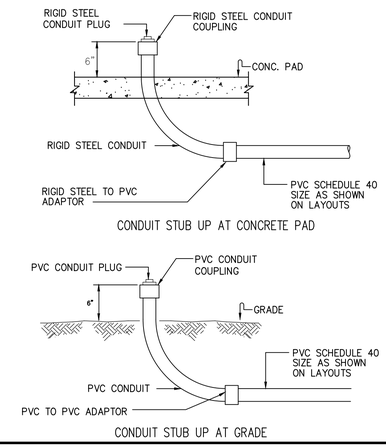

CONDUIT STUB–UPS | NO SCALE | 2

NOT USED | NO SCALE | 5

LT-PM63915xN4

2. PRODUCT DESCRIPTION

The CUBE is a single equipment compartment with 39RU of 23" horizontal rack mount spacing with a 600A 48VDC rack mounted ABB power system. The PM639155N4 has a 6000W heat exchanger, and the PM63915IN4 has a 6000BTU HVAC system.

Figure 2 shows the CUBE dimensions. Figures 3 and 4 show the main components of each CUBE.

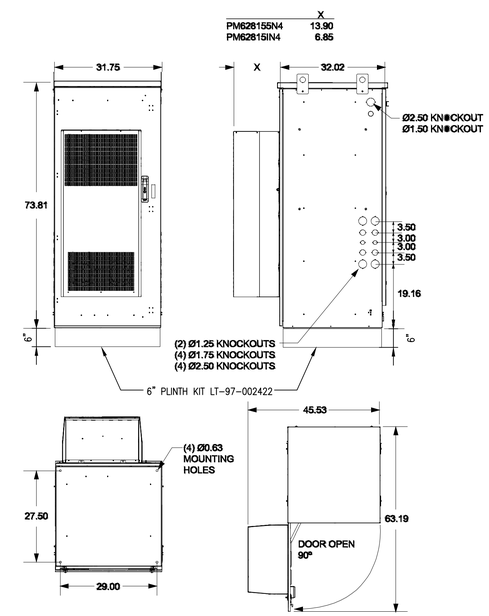

Figure 2 CUBE Dimensions (in inches)
All dimensions are common to both models except for depth of thermal unit.

CABINET DETAIL W/ PLINTH KIT | NO SCALE | 6

NOT USED | NO SCALE | 7

NOT USED | NO SCALE | 8

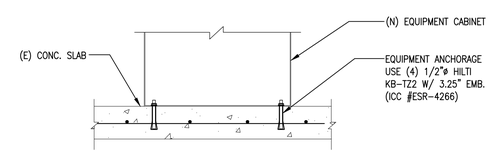

NO SCALE | 9

dish WIRELESS
5701 SOUTH SANTA FE DRIVE
LITTLETON, CO 80120

BUTLER America Telecom LLC
1511 E. ORANGETHORPE AVE., SUITE D
FULLERTON, CA 92831

CDG
22431 ANTONIO PKWY
SUITE B160–131
RANCHO SANTA MARGARITA CA 92688
dconnell@connelldesigngroup.com
949–306–4644

REGISTERED PROFESSIONAL ENGINEER DANIEL MICHAEL CONNELL NO. 62543 EXP. 12/31/23 CIVIL STATE OF CALIFORNIA

DATE STAMPED: 08/12/2022

IT IS A VIOLATION OF LAW FOR ANY PERSON, UNLESS THEY ARE ACTING UNDER THE DIRECTION OF A LICENSED PROFESSIONAL ENGINEER, TO ALTER THIS DOCUMENT.

DRAWN BY:	CHECKED BY:	APPROVED BY:
LE	JPC	DC

RFDS REV #1 DATED 04/05/2022

CONSTRUCTION DOCUMENTS

SUBMITTALS

REV	DATE	DESCRIPTION
A	07/25/2022	ISSUED FOR 90% CD REVIEW
0	08/11/2022	ISSUED FOR 90% CD REVIEW

(VENDOR) PROJECT NUMBER
SFSF001108B

DISH WIRELESS PROJECT NUMBER
SFSF001108B

761 NEESON RD.
MARINA, CA 93933
ROOFTOP

SHEET TITLE
EQUIPMENT DETAILS

SHEET NUMBER
D-2

NOT USED | NO SCALE | 1

CHARLES CFIT-PF2020DSH1 FIBER TELCO ENCLOSURE

DIMENSIONS (HxWxD)	20"x20"x9"
TOTAL WEIGHT	20 lbs
MOUNTING	WALL OR H-FRAME
COMPLIANCE	TYPE 4

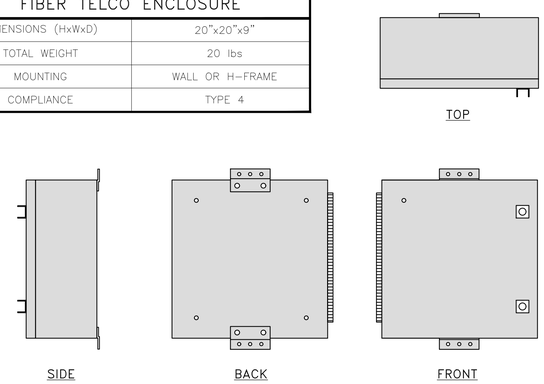

FIBER ENCLOSURE DETAIL | NO SCALE | 2

CIENA 3931 FIBER NID ENCLOSURE

DIMENSIONS (HxWxD)	17"x16.8"x7"
TOTAL WEIGHT	25.6 lbs

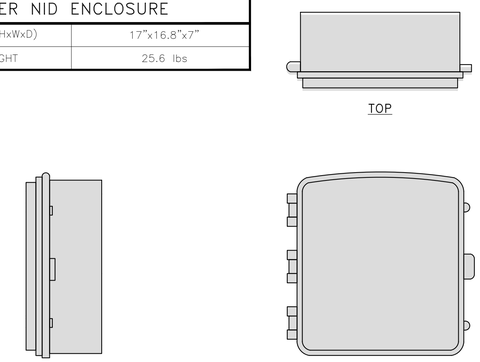

FIBER NID DETAIL | NO SCALE | 3

NOT USED | NO SCALE | 4

RAYCAP PPC RDIAC-2465-P-240-MTS

DIMENSIONS (HxWxD)	39"x22.7"x12.6"
TOTAL WEIGHT	80 lbs
OPERATING AC VOLTAGE	120/240 1ø 3W

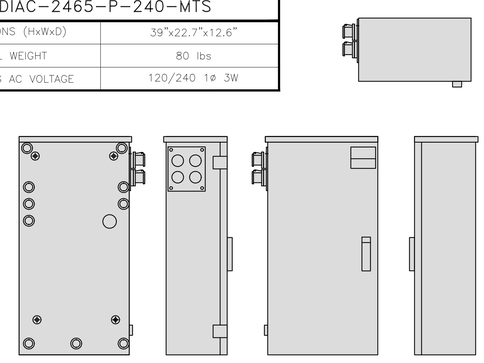

POWER PROTECTION CABINET (PPC) DETAIL | NO SCALE | 5

POLARIUM BATTERY SLB48-200-228-1U

DIMENSIONS (HxWxD)	21.4"x28.5"x3.4"
TOTAL WEIGHT	116.8 lbs
RATED VOLTAGE	48V

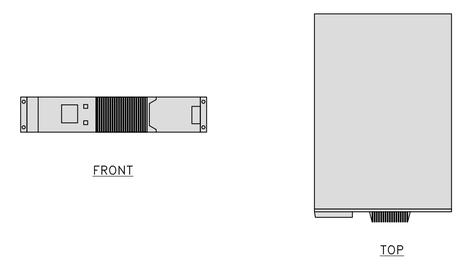

BATTERY DETAIL | NO SCALE | 6

NOT USED | NO SCALE | 7

NOT USED | NO SCALE | 8

NOT USED | NO SCALE | 9

dish WIRELESS
5701 SOUTH SANTA FE DRIVE
LITTLETON, CO 80120

BUTLER America Telecom LLC
1511 E. ORANGETHORPE AVE., SUITE D
FULLERTON, CA 92831

CDG
22431 ANTONIO PKWY
SUITE B160-131
RANCHO SANTA MARGARITA CA 92688
dconnell@connelldesigngroup.com
949-306-4644

REGISTERED PROFESSIONAL ENGINEER
DANIEL MICHAEL CONNELL
NO. 62543
EXP. 12/31/23
CIVIL
STATE OF CALIFORNIA

DATE STAMPED: 08/12/2022

IT IS A VIOLATION OF LAW FOR ANY PERSON, UNLESS THEY ARE ACTING UNDER THE DIRECTION OF A LICENSED PROFESSIONAL ENGINEER, TO ALTER THIS DOCUMENT.

DRAWN BY:	CHECKED BY:	APPROVED BY:
LE	JPC	DC

RFDS REV #1 DATED 04/05/2022

CONSTRUCTION DOCUMENTS

SUBMITTALS

REV	DATE	DESCRIPTION
A	07/25/2022	ISSUED FOR 90% CD REVIEW
0	08/11/2022	ISSUED FOR 90% CD REVIEW

(VENDOR) PROJECT NUMBER
SFSF001108B

DISH WIRELESS PROJECT NUMBER
SFSF001108B

761 NEESON RD.
MARINA, CA 93933
ROOFTOP

SHEET TITLE
EQUIPMENT DETAILS

SHEET NUMBER
D-3

ELECTRICAL NOTES

1. ALL ELECTRICAL WORK SHALL BE DONE IN ACCORDANCE WITH CURRENT NATIONAL ELECTRICAL CODES AND ALL LOCAL AND STATE CODE, LAWS, AND ORDINANCES. PROVIDE ALL COMPONENTS AND WIRING SIZES AS REQUIRED TO MEET NEC STANDARDS.
2. CONTRACTOR SHALL COORDINATE WITH LOCAL POWER COMPANY FOR REQUIREMENTS OF POWER SERVICE LINE TO THE METER BASE. POWER SERVICE REQUIREMENT IS COMMERCIAL AC NOMINAL 120/208 VOLT OR 120/240 VOLT, SINGLE PHASE WITH 200 AMP RATING.
3. CONTRACTOR SHALL COORDINATE WITH LOCAL TELEPHONE COMPANY FOR REQUIREMENTS OF "T1" SERVICE LINE TO TERMINATE AT THE PPC CABINET.
4. CONTRACTOR SHALL FURNISH AND INSTALL ELECTRIC METER BASE AND 200A DISCONNECT SWITCH PER SITE PLAN AND DETAIL DRAWINGS. THE METER BASE SHOULD BE LOCATED IN A MANNER WHERE ACCESSIBLE BY THE LOCAL POWER COMPANY.
5. LOCAL POWER COMPANY SHALL PROVIDE 200 AMP ELECTRIC METER. CONTRACTOR SHALL COORDINATE INSTALLATION OF METER WITH LOCAL POWER COMPANY.
6. UNDERGROUND POWER AND TELCO SERVICE LINES SHALL BE ROUTED IN A COMMON TRENCH. ALL UNDERGROUND CONDUIT SHALL BE PVC SCHEDULE 40 AND CONDUIT EXPOSED ABOVE GROUND SHALL BE RIGID GALVANIZED STEEL UNLESS OTHERWISE INDICATED.
7. ALL TELCO CONDUIT LINES SHALL BE 4" SCH. 40 PVC CONDUIT UNLESS OTHERWISE INDICATED. THE TELCO CONDUIT FROM THE PPC SHALL BE ROUTED AND TERMINATED AT DESIGNATED TELCO DEMARCATION OR 2-FEET OUTSIDE FENCED AREA, NEAR UTILITY POLE (IN FENCED AREA), OR END CAP OFF AND PROVIDE MARKER STAKE PAINTED BRIGHT ORANGE WITH DESIGNATION FOR TELCO SERVICE.
8. CONDUITS INSTALLED AT PCS EQUIPMENT ENDS PRIOR TO THE EQUIPMENT INSTALLATION SHALL BE STUBBED AND CAPPED AT 6" ABOVE GRADE OR PLATFORM. IF SERVICE LINES CAN'T BE INSTALLED INITIALLY, PROVIDE NYLON PULL CORD IN CONDUITS.
9. THE DISH WIRELESS CABINET, INCLUDING 200 AMP LOAD PANEL AND TELCO PANEL, SHALL BE PROVIDED BY OWNER AND INSTALLED BY THE CONTRACTOR. CONTRACTOR IS TO INSTALL BREAKER(S) NOT PROVIDED BY MANUFACTURER. SEE PANEL SCHEDULE ON THIS SHEET FOR BREAKER REQUIREMENTS.
10. LOCATION OF ELECTRIC METER AND DISCONNECT SWITCH TO BE COORDINATED BY ELECTRICAL CONTRACTOR AND FIELD CONSTRUCTION MANAGER.
11. #2 WIRE TO BE UTILIZED IN ELECTRIC SERVICE RUNS EXCEEDING 100'.
12. CONTRACTOR SHALL INSPECT THE EXISTING CONDITIONS PRIOR TO SUBMITTING BID. ANY QUESTIONS ARISING DURING THE BID PERIOD IN REGARDS TO THE CONTRACTORS FUNCTIONS, THE SCOPE OF WORK, OR ANY OTHER ISSUE RELATED TO THIS PROJECT SHALL BE BROUGHT UP DURING THE BID PERIOD WITH THE PROJECT MANAGER FOR CLARIFICATION, NOT AFTER THE CONTRACT HAS BEEN AWARDED.
13. LOCATION OF EQUIPMENT, CONDUIT AND DEVICES SHOWN ON THE DRAWINGS ARE APPROXIMATE AND SHALL BE COORDINATED WITH FIELD CONDITIONS PRIOR TO ROUGH-IN.
14. THE CONDUIT RUNS AS SHOWN ON THE PLANS ARE APPROXIMATE. EXACT LOCATION AND ROUTING SHALL BE PER EXISTING FIELD CONDITIONS.
15. PROVIDE PULL BOXES AND JUNCTION BOXES WHERE SHOWN OR REQUIRED BY NEC.
16. ALL CONDUITS SHALL BE MET WITH BENDS MADE IN ACCORDANCE WITH NEC TABLE 346-10. NO RIGHT ANGLE DEVICE OTHER THAN STANDARD CONDUIT ELBOWS WITH 12" MINIMUM INSIDE SWEEPS FOR ALL CONDUITS 2" OR LARGER.
17. ALL CONDUIT TERMINATIONS SHALL BE PROVIDED WITH PLASTIC THROAT INSULATING GROUNDING BUSHINGS.
18. ALL WIRE SHALL BE TYPE THWN, SOLID, ANNEALED COPPER UP TO SIZE #10 AWG (#8 AND LARGER SHALL BE CONCENTRIC STRANDED) 75 DEGREE C, (167 DEGREES F), 98% CONDUCTIVITY, MINIMUM #12.
19. ALL WIRES SHALL BE TAGGED AT ALL PULL BOXES, J-BOXES, EQUIPMENT BOXES AND CABINETS WITH APPROVED PLASTIC TAGS, ACTION CRAFT, BRADY, OR APPROVED EQUAL.
20. ALL NEW MATERIAL SHALL HAVE A U.L. LABEL.
21. CONDUIT ROUGH-IN SHALL BE COORDINATED WITH THE MECHANICAL EQUIPMENT TO AVOID LOCATION TO CONFLICTS. VERIFY WITH MECHANICAL CONTRACTOR AND COMPLY AS REQUIRED.
22. ALL PANEL DIRECTORIES SHALL BE TYPEWRITTEN NOT HAND WRITTEN.
23. INSTALL AN EQUIPMENT GROUNDING CONDUCTOR IN ALL CONDUITS PER THE SPECIFICATIONS AND NEC. THE EQUIPMENT GROUNDING CONDUCTORS SHALL BE BONDED AT ALL JUNCTION BOXES, PULL BOXES, AND ALL DISCONNECT SWITCHES, STARTERS, AND EQUIPMENT CABINETS.
24. THE CONTRACTOR SHALL PREPARE AS-BUILT DRAWINGS, DOCUMENT ANY AND ALL WIRING AND EQUIPMENT CONDITIONS AND CHANGES WHILE COMPLETING THIS CONTRACT. SUBMIT AT SUBSTANTIAL COMPLETION.
25. ALL DISCONNECT SWITCHES AND OTHER CONTROLLING DEVICES SHALL BE PROVIDED WITH ENGRAVED PHENOLIC NAMEPLATES INDICATING EQUIPMENT CONTROLLED, BRANCH CIRCUITS INSTALLED ON, AND PANEL FIELD LOCATIONS FED FROM (NO EXCEPTIONS.)
26. ALL ELECTRICAL DEVICES AND INSTALLATIONS OF THE DEVICES SHALL COMPLY WITH (ADA) AMERICANS WITH DISABILITIES ACT AS ADOPTED BY THE APPLICABLE STATE.
27. PROVIDE CORE DRILLING AS NECESSARY FOR PENETRATIONS OR RISERS THROUGH BUILDING. DO NOT PENETRATE STRUCTURAL MEMBERS WITHOUT CONSTRUCTION MANAGERS APPROVAL. SLEEVES AND/OR PENETRATIONS IN FIRE RATED CONSTRUCTION SHALL BE PACKED WITH FIRE RATED MATERIAL WHICH SHALL MAINTAIN THE FIRE RATING OF THE WALL OR STRUCTURE. FILL FOR FLOOR PENETRATIONS SHALL PREVENT PASSAGE OF WATER, SMOKE, FIRE AND FUMES. ALL MATERIAL SHALL BE UL APPROVED FOR THIS PURPOSE.
28. ELECTRICAL CHARACTERISTICS OF ALL EQUIPMENT (NEW AND EXISTING) SHALL BE FIELD VERIFIED WITH THE OWNER'S REPRESENTATIVE AND EQUIPMENT SUPPLIER PRIOR TO ROUGH-IN OF CONDUIT AND WIRE. ALL EQUIPMENT SHALL BE PROPERLY CONNECTED ACCORDING TO THE NAMEPLATE DATA FURNISHED ON THE EQUIPMENT (THE DESIGN OF THESE PLANS ARE BASED UPON BEST AVAILABLE INFORMATION AT THE TIME OF DESIGN AND SOME EQUIPMENT CHARACTERISTICS MAY VARY FROM DESIGN AS SHOWN ON THESE DRAWINGS).
29. LOCATION OF ALL OUTLET, BOXES, ETC., AND THE TYPE OF CONNECTION (PLUG OR DIRECT) SHALL BE CONFIRMED WITH THE OWNER'S REPRESENTATIVE PRIOR TO ROUGH-IN.

ELECTRICAL NOTES | NO SCALE | 3

(1) (N) CB 2P/100A, (N) CB SHOULD BE THE SAME TYPE AND A.I.C. RATING W/ (E) CBS

NOTE:
THE POWER PLAN IS PRELIMINARY PENDING THE FINAL PG&E DESIGN

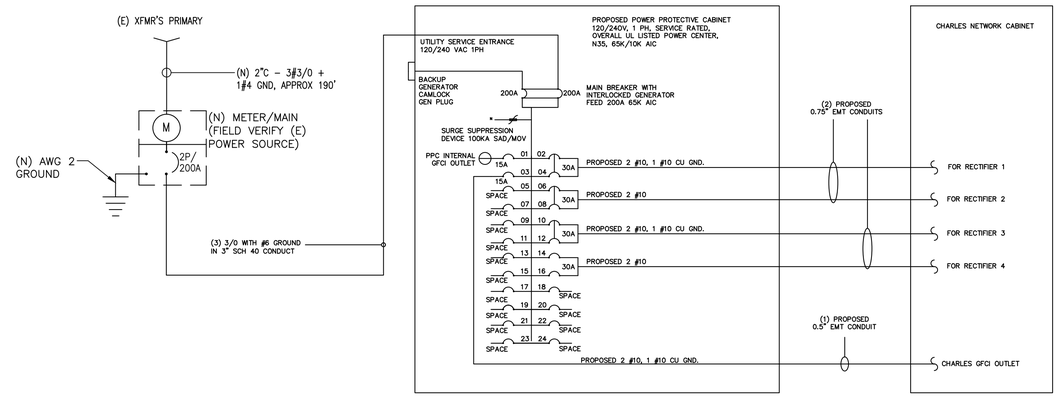

NOTE:
BRANCH CIRCUIT WIRING SUPPLYING RECTIFIERS ARE TO BE RATED UL1015, 105°C, 600V, AND PVC INSULATED, IN THE SIZE SHOWN IN THE ONE-LINE DIAGRAM. CONTRACTOR MAY SUBSTITUTE UL1015 WIRE FOR THHN-2 FOR CONVENIENCE OUTLET BRANCH CIRCUIT

BREAKERS REQUIRED:
(4) 30A, 2P BREAKER – SQUARE D P/N: QO230
(2) 15A, 1P BREAKER, – SQUARE D P/N: QO115

GENERAL NOTES:
1. GENERAL CONTRACTOR TO NOTIFY CDG IF THERE ARE ANY DISCREPANCIES BETWEEN THE ACTUAL SITE CONDITIONS AND THE DRAWINGS
2. ALL WORK TO BE COMPLIED WITH NFPA 70E AND OSHA TITLE 29.
3. ALL BOXES AND ENCLOSURES (INCLUDING TRANSFER SWITCHES, GENERATORS AND POWER PANELS) FOR EMERGENCY CIRCUITS SHALL BE PERMANENTLY MARKED SO THEY WILL BE READILY IDENTIFIABLE AS A COMPONENT OF AN EMERGENCY CIRCUIT OR SYSTEM.

NOTE:
REFER TO SHEET A-1 FOR UTILITY ROUTING PLAN

SINGLE LINE DIAGRAM | NO SCALE | 1

NOTES

THE ENGINEER OF RECORD HAS PERFORMED ALL REQUIRED SHORT CIRCUIT CALCULATIONS AND THE AIC RATING FOR EACH DEVICE IS ADEQUATE TO PROTECT THE EQUIPMENT AND THE ELECTRICAL SYSTEM.

THE ENGINEER OF RECORD HAS PERFORMED ALL REQUIRED VOLTAGE DROP CALCULATIONS AND ALL BRANCH CIRCUIT AND FEEDERS COMPLY WTH NEC (LISTED ON T-1) ARTICLE 210.19(A)(1) FPN NO. 4.

THE (2) CONDUITS WTH (4) CURRENT CARRYING CONDUCTORS EACH, SHALL APPLY THE ADJUSTMENT FACTOR OF 80% PER 2014/17 NEC TABLE 310.15(B)(3)(A) OR 2020 NEC TABLE 310.15(C)(1) FOR UL1015 WIRE

#12 FOR 15A-20A/1P BREAKER: 0.8 X 30A = 24.0A
#10 FOR 25A-30A/2P BREAKER: 0.8 X 40A = 32.0A
#8 FOR 35A-40A/2P BREAKER: 0.8 X 55A = 44.0A
#6 FOR 45A-60A/2P BREAKER: 0.8 X 75A = 60.0A

CONDUIT SIZING: AT 40% FILL PER NEC CHAPTER 9, TABLE 4, ARTICLE 358

0.5" CONDUIT – 0.122 SQ. IN AREA
0.75" CONDUIT – 0.213 SQ. IN AREA
2.0" CONDUIT – 1.316 SQ. IN AREA
3.0" CONDUIT – 2.907 SQ. IN AREA

CABINET CONVENIENCE OUTLET CONDUCTORS (1 CONDUIT): USING THWN-2, CU.

#10 – 0.0211 SQ. IN X 2 – 0.0422 SQ. IN
#10 – 0.0211 SQ. IN X 1 – 0.0211 SQ. IN <GROUND
TOTAL – 0.0633 SQ. IN

0.5" EMT CONDUIT IS ADEQUATE TO HANDLE THE TOTAL OF (3) WIRES, INCLUDING GROUND WIRE, AS INDICATED ABOVE.

RECTIFIER CONDUCTORS (2 CONDUITS): USING UL1015, CU.

#10 – 0.0266 SQ. IN X 4 = 0.1064 SQ. IN
#10 – 0.0082 SQ. IN X 1 = 0.0082 SQ. IN <BARE GROUND
TOTAL = 0.1146 SQ. IN

0.75" EMT CONDUIT IS ADEQUATE TO HANDLE THE TOTAL OF (5) WIRES, INCLUDING GROUND WIRES, AS INDICATED ABOVE.

PPC FEED CONDUCTORS (1 CONDUIT): USING THWN, CU.

3/0 – 0.2679 SQ. IN X 3 – 0.8037 SQ. IN
#6 – 0.0507 SQ. IN X 1 – 0.0507 SQ. IN <GROUND
TOTAL – 0.8544 SQ. IN

3.0" SCH 40 PVC CONDUIT IS ADEQUATE TO HANDLE THE TOTAL OF (4) WIRES INCLUDING GROUND WIRE, AS INDICATED ABOVE.

PROPOSED PANEL SCHEDULE
RAYCAP PPC CABINET
200A, 120/240V, 1ø, 3W, 65kA

LOAD SERVED	VOLT AMPS (WATTS) L1	VOLT AMPS (WATTS) L2	TRIP	CKT #	PHASE	CKT #	TRIP	VOLT AMPS (WATTS) L1	VOLT AMPS (WATTS) L2	LOAD SERVED
PPC GFCI	180		15A	1	A	2	30A	2880		RECTIFIER #1
SPACE				3	B	4			2880	
				5	A	6	30A	2880		RECTIFIER #2
				7	B	8			2880	
				9	A	10	30A	2880		RECTIFIER #3
				11	B	12			2880	
				13	A	14	30A	2880		RECTIFIER #3
				15	B	16			2880	
				17	A	18	15A	180		CHARLES GFCI
				19	B	20				
				21	A	22				
				23	B	24				
				25	A	26				
				27	B	28				
				29	A	30				
VOLT AMPS	180	0						11700	11520	
200A MCB, 1ϕ, 3W, 120/240V			L1		L2					
MB RATING: 22,000 AIC			11880		11520	VOLT AMPS				
			49.5		48	AMPS				
			97.5			MAX AMPS				
			121.9			MAX 125%				

PANEL SCHEDULE | NO SCALE | 2

dish WIRELESS
5701 SOUTH SANTA FE DRIVE
LITTLETON, CO 80120

BUTLER America Telecom LLC
1511 E. ORANGETHORPE AVE., SUITE D
FULLERTON, CA 92831

CDG
22431 ANTONIO PKWY
SUITE B160-131
RANCHO SANTA MARGARITA CA 92688
dconnell@connelldesigngroup.com
949-306-4644

REGISTERED PROFESSIONAL ENGINEER DANIEL MICHAEL CONNELL NO. 62543 EXP. 12/31/23 CIVIL STATE OF CALIFORNIA

DATE STAMPED: 08/12/2022

IT IS A VIOLATION OF LAW FOR ANY PERSON, UNLESS THEY ARE ACTING UNDER THE DIRECTION OF A LICENSED PROFESSIONAL ENGINEER, TO ALTER THIS DOCUMENT.

DRAWN BY:	CHECKED BY:	APPROVED BY:
LE	JPC	DC

RFDS REV #1 DATED 04/05/2022

CONSTRUCTION DOCUMENTS

SUBMITTALS

REV	DATE	DESCRIPTION
A	07/25/2022	ISSUED FOR 90% CD REVIEW
0	08/11/2022	ISSUED FOR 90% CD REVIEW

(VENDOR) PROJECT NUMBER
SFSF001108B

DISH WIRELESS PROJECT NUMBER
SFSF001108B

761 NEESON RD.
MARINA, CA 93933
ROOFTOP

SHEET TITLE
S.L.D., PANEL SCHEDULE & NOTES

SHEET NUMBER
E-1

DC POWER WIRING SHALL BE COLOR CODED AT EACH END FOR IDENTIFYING +24V AND −48V CONDUCTORS. RED MARKINGS SHALL IDENTIFY +24V AND BLUE MARKINGS SHALL IDENTIFY −48V.

1. CONTRACTOR SHALL INSPECT THE EXISTING CONDITIONS PRIOR TO SUBMITTING A BID. ANY QUESTIONS ARISING DURING THE BID PERIOD IN REGARDS TO THE CONTRACTOR'S FUNCTIONS, THE SCOPE OF WORK, OR ANY OTHER ISSUE RELATED TO THIS PROJECT SHALL BE BROUGHT UP DURING THE BID PERIOD WITH THE PROJECT MANAGER FOR CLARIFICATION, NOT AFTER THE CONTRACT HAS BEEN AWARDED.
2. ALL ELECTRICAL WORK SHALL BE DONE IN ACCORDANCE WITH CURRENT NATIONAL ELECTRICAL CODES AND ALL STATE AND LOCAL CODES, LAWS, AND ORDINANCES. PROVIDE ALL COMPONENTS AND WIRING SIZES AS REQUIRED TO MEET NEC STANDARDS.
3. LOCATION OF EQUIPMENT, CONDUIT AND DEVICES SHOWN ON THE DRAWINGS ARE APPROXIMATE AND SHALL BE COORDINATED WITH FIELD CONDITIONS PRIOR TO CONSTRUCTION.
4. CONDUIT ROUGH−IN SHALL BE COORDINATED WITH THE MECHANICAL EQUIPMENT TO AVOID LOCATION CONFLICTS. VERIFY WITH THE MECHANICAL EQUIPMENT CONTRACTOR AND COMPLY AS REQUIRED.
5. CONTRACTOR SHALL PROVIDE ALL BREAKERS, CONDUITS AND CIRCUITS AS REQUIRED FOR A COMPLETE SYSTEM.
6. CONTRACTOR SHALL PROVIDE PULL BOXES AND JUNCTION BOXES AS REQUIRED BY THE NEC ARTICLE 314.
7. CONTRACTOR SHALL PROVIDE ALL STRAIN RELIEF AND CABLE SUPPORTS FOR ALL CABLE ASSEMBLIES. INSTALLATION SHALL BE IN ACCORDANCE WITH MANUFACTURER'S SPECIFICATIONS AND RECOMMENDATIONS.
8. ALL DISCONNECTS AND CONTROLLING DEVICES SHALL BE PROVIDED WITH ENGRAVED PHENOLIC NAMEPLATES INDICATING EQUIPMENT CONTROLLED, BRANCH CIRCUITS INSTALLED ON, AND PANEL FIELD LOCATIONS FED FROM.
9. INSTALL AN EQUIPMENT GROUNDING CONDUCTOR IN ALL CONDUITS PER THE SPECIFICATIONS AND NEC 250. THE EQUIPMENT GROUNDING CONDUCTORS SHALL BE BONDED AT ALL JUNCTION BOXES, PULL BOXES, AND ALL DISCONNECT SWITCHES, AND EQUIPMENT CABINETS.
10. ALL NEW MATERIAL SHALL HAVE A U.L. LABEL.
11. PANEL SCHEDULE LOADING AND CIRCUIT ARRANGEMENTS REFLECT POST−CONSTRUCTION EQUIPMENT.
12. CONTRACTOR SHALL BE RESPONSIBLE FOR AS−BUILT PANEL SCHEDULE AND SITE DRAWINGS.

ELECTRICAL NOTES | NO SCALE | 1

DURA−BLOK DB10 ROOFTOP CABLE SUPPORT	
DIMENSIONS (HxWxL)	5"x6"x9.6"
WEIGHT/ VOLUME	5.28 LBS
ULTIMATE LOAD CAPACITY	500 LBS
NOTE: NON−PENETRATING	

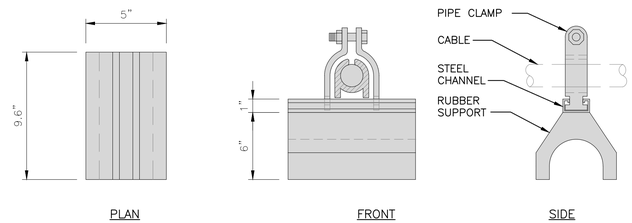

ROOFTOP CABLE SUPPORT DETAIL | NO SCALE | 2

UNISTRUT PIPE CLAMP WALL MOUNT	
STANDOFF	12"
DIMENSIONS (HxWxD)	10"x 7"x 12"
WEIGHT WITH BRACKETS	55.75 LBS

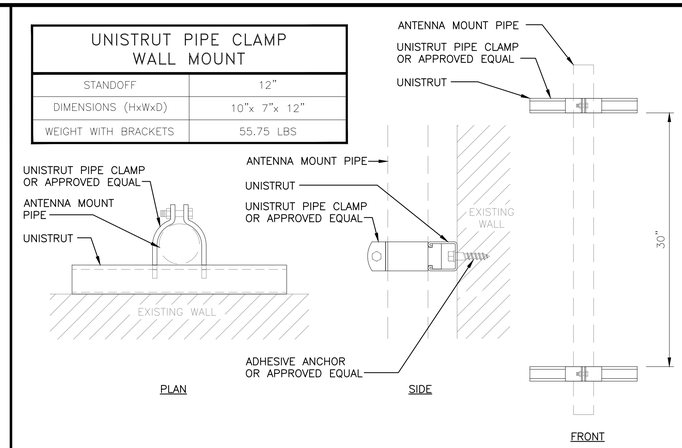

UNISTRUT WALL MOUNT DETAIL | NO SCALE | 3

SQUARE D SAFETY SWITCH D324NRB	
ENCLOSURE DIM (HxWxD)	29.25"x17.25"x8.25"
TOTAL WEIGHT (EMPTY)	45.33 LBS
MAX VOLTAGE/AMPS/WATT	240V/200A/48000W
ENCLOSURE RATING	OUTDOOR NEMA 3R

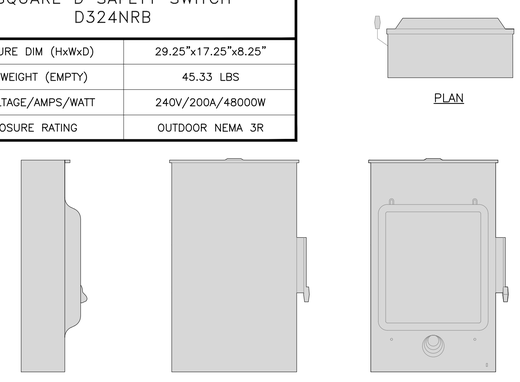

SAFETY SWITCH | NO SCALE | 4

EATON METER SOCKET UNRRS213BEUSE	
METER SOCKET TYPE	RING
ENCLOSURE DIM (HxWxD)	16"x12"x6"
MAIN AMPERE RATING	200A
WEIGHT	18 LBS

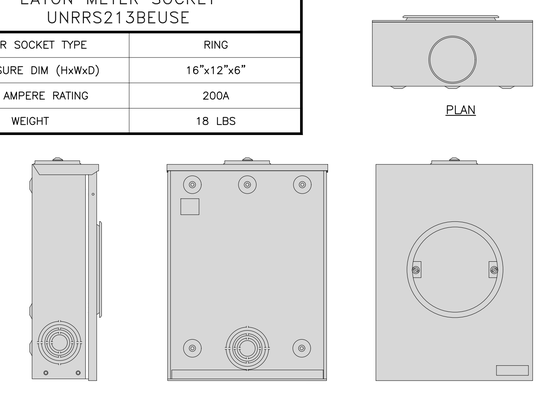

METER SOCKET DETAIL | NO SCALE | 5

NOT USED | NO SCALE | 6

NOT USED | NO SCALE | 7

NOTE:
1. VERIFY (E) CONDUIT LOCATION AND CONDITION. DO NOT DAMAGE (E) CONDUIT. (E) CONDUIT TO BE ENCASED IN CONCRETE IF UNDER (N) CONCRETE PAD FOOTING.

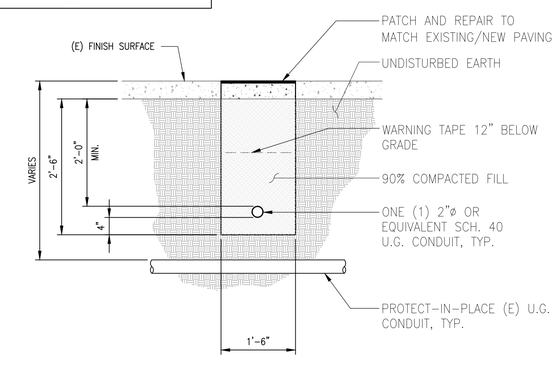

TRENCH DETAIL | NO SCALE | 8

dish WIRELESS
5701 SOUTH SANTA FE DRIVE
LITTLETON, CO 80120

BUTLER America Telecom LLC
1511 E. ORANGETHORPE AVE., SUITE D
FULLERTON, CA 92831

CDG
22431 ANTONIO PKWY
SUITE B160−131
RANCHO SANTA MARGARITA CA 92688
dconnell@connelldesigngroup.com
949−306−4644

REGISTERED PROFESSIONAL ENGINEER DANIEL MICHAEL CONNELL NO. 62543 EXP. 12/31/23 CIVIL STATE OF CALIFORNIA

DATE STAMPED: 08/12/2022

IT IS A VIOLATION OF LAW FOR ANY PERSON, UNLESS THEY ARE ACTING UNDER THE DIRECTION OF A LICENSED PROFESSIONAL ENGINEER, TO ALTER THIS DOCUMENT.

DRAWN BY:	CHECKED BY:	APPROVED BY:
LE	JPC	DC

RFDS REV #1 DATED 04/05/2022

CONSTRUCTION DOCUMENTS

SUBMITTALS

REV	DATE	DESCRIPTION
A	07/25/2022	ISSUED FOR 90% CD REVIEW
0	08/11/2022	ISSUED FOR 90% CD REVIEW

(VENDOR) PROJECT NUMBER
SFSF001108B

DISH WIRELESS PROJECT NUMBER
SFSF001108B

761 NEESON RD.
MARINA, CA 93933
ROOFTOP

SHEET TITLE
ELECTRICAL DETAILS

SHEET NUMBER
E-2

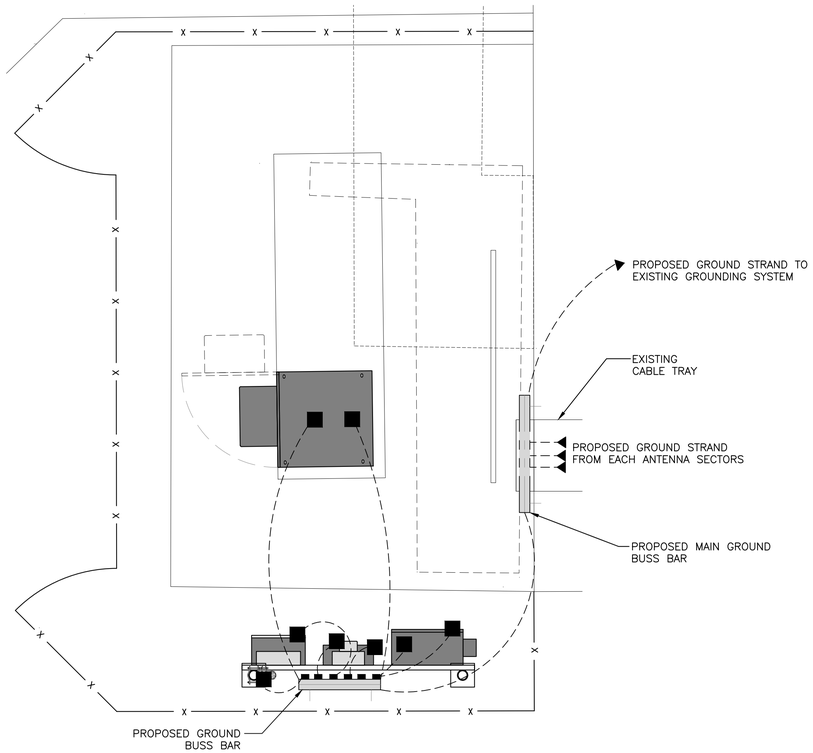

EQUIPMENT GROUNDING PLAN | NO SCALE | 1

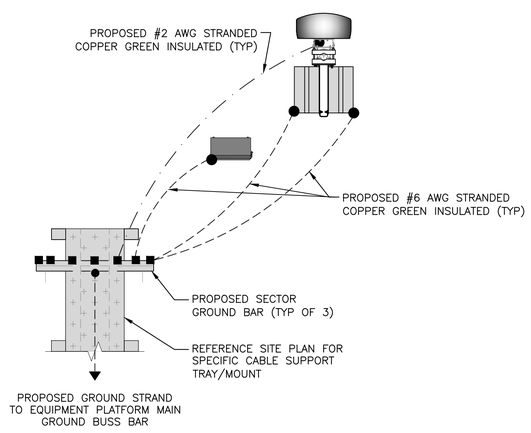

TYPICAL ANTENNA GROUNDING PLAN | NO SCALE | 2

*ACTUAL LAYOUT MAY VARY. SEE SITE PLAN FOR POSITIONS

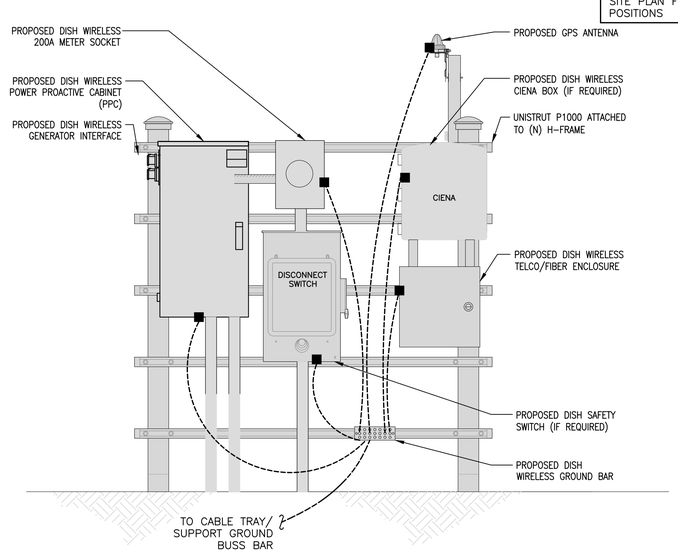

H-FRAME GROUNDING DETAIL | NO SCALE | 1

- EXOTHERMIC CONNECTION
- MECHANICAL CONNECTION
- GROUND BUS BAR
- GROUND ROD
- TEST GROUND ROD WITH INSPECTION SLEEVE
- #6 AWG STRANDED & INSULATED
- #2 AWG SOLID COPPER TINNED

GROUNDING LEGEND

1. GROUNDING IS SHOWN DIAGRAMMATICALLY ONLY.
2. CONTRACTOR SHALL GROUND ALL EQUIPMENT AS A COMPLETE SYSTEM. GROUNDING SHALL BE IN COMPLIANCE WITH NEC SECTION 250 AND DISH WIRELESS GROUNDING AND BONDING REQUIREMENTS AND MANUFACTURER'S SPECIFICATIONS.
3. ALL GROUND CONDUCTORS SHALL BE COPPER; NO ALUMINUM CONDUCTORS SHALL BE USED.
4. NO EXOTHERMIC WELDING ON ROOFTOP

GROUNDING KEY NOTES

(A) ROOF MOUNTED SUPPORT STRUCTURES: BOND ROOF-MOUNTED ANTENNA MASTS AND SUPPORT STRUCTURES TO THE EXISTING LIGHTNING PROTECTION SYSTEM, EXISTING BUILDING GROUND, NON-FIRE SUPPRESSION COLD WATER PIPE, OR GROUND RIN/ROD AT GROUND LEVEL USING #2 STRANDED GREEN INSULATED COPPER WIRE.

(B) BONDING: ALL ROOFTOP GROUND CONNECTIONS SHALL BE MECHANICAL WITH ANTI OXIDIZING COMPOUND BETWEEN MATING SURFACES. EXOTHERMIC WELDS ARE NOT ALLOWED ON ROOFTOP OR IN-BUILDING APPLICATIONS UNLESS THE COMPONENT IS SUPPLIED FROM THE MANUFACTURER PRE-WELDED.

(C) EXTERIOR GROUND RING: #2 AWG SOLID COPPER, BURIED AT A DEPTH OF AT LEAST 30 INCHES BELOW GRADE, OR 6 INCHES BELOW THE FROST LINE AND APPROXIMATELY 24 INCHES FROM THE EXTERIOR WALL OR FOOTING.

(D) INTERIOR GROUND RING: #2 AWG STRANDED GREEN INSULATED COPPER CONDUCTOR EXTENDED AROUND THE PERIMETER OF THE EQUIPMENT AREA. ALL NON-TELECOMMUNICATIONS RELATED METALLIC OBJECTS FOUND WITHIN A SITE SHALL BE GROUNDED TO THE INTERIOR GROUND RING WITH #6 AWG STRANDED GREEN INSULATED CONDUCTOR.

BOND TO INTERIOR GROUND RING: #2 AWG SOLID TINNED COPPER WIRE PRIMARY BONDS SHALL BE PROVIDED AT LEAST AT FOUR POINTS ON THE INTERIOR GROUND RING, LOCATED AT THE CORNERS OF THE BUILDING.

GROUND ROD: UL LISTED COPPER CLAD STEEL. MINIMUM 1/2" DIAMETER BY EIGHT FEET LONG. GROUND RODS SHALL BE INSTALLED WITH INSPECTION SLEEVES. GROUND RODS SHALL BE DRIVEN TO THE DEPTH OF GROUND RING CONDUCTOR. CHEMICAL GROUND RODS MAY BE USED WHEN APPLICABLE.

(E) CELL REFERENCE GROUND BAR: POINT OF GROUND REFERENCE FOR ALL COMMUNICATIONS EQUIPMENT FRAMES. ALL BONDS ARE MADE WITH #2 AWG UNLESS NOTED OTHERWISE STRANDED GREEN INSULATED COPPER

(F) CONDUCTORS. BOND TO GROUND RING OR GROUND LEVEL GROUND ROD WITH (2) #2 SOLID TINNED COPPER CONDUCTORS.

(H/G) HATCH PLATE GROUND BAR: BOND TO THE INTERIOR GROUND RING WITH TWO #2 AWG STRANDED GREEN INSULATED COPPER CONDUCTORS. WHEN A HATCH-PLATE AND A CELL REFERENCE GROUND BAR ARE BOTH PRESENT, THE CRGB MUST BE CONNECTED TO THE HATCH-PLATE AND TO THE INTERIOR GROUND RING USING (2) TWO #2 AWG STRANDED GREEN INSULATED COPPER CONDUCTORS EACH.

(J) EXTERIOR CABLE ENTRY PORT GROUND BARS: LOCATED AT THE ENTRANCE TO THE CELL SITE BUILDING. BOND TO GROUND RING WITH A #2 AWG SOLID TINNED COPPER CONDUCTORS WITH AN EXOTHERMIC WELD AND INSPECTION SLEEVE.

(K) FRAME BONDING: THE BONDING POINT FOR TELECOM EQUIPMENT FRAMES SHALL BE THE GROUND BUSSBAR THAT IS NOT ISOLATED FROM THE EQUIPMENTS METAL FRAMEWORK. BOND THE FRAME GROUND TO THE "I" SECTION OF THE CELL REFERENCE GROUND BAR OR SUPPLEMENTARY CONDUCTOR. (SHEET G3 DETAIL1)

(L) INTERIOR UNIT BONDS: METAL FRAMES, CABINETS AND INDIVIDUAL METALLIC UNITS LOCATED WITH THE AREA OF THE INTERIOR GROUND RING REQUIRE A #6 AWG STRANDED GREEN INSULATED COPPER BOND TO THE INTERIOR GROUND RING.

(M) FENCE AND GATE GROUNDING: METAL FENCES WITHIN 7 FEET OF THE EXTERIOR GROUND RING OR OBJECTS BONDED TO THE EXTERIOR GROUND RING SHALL BE BONDED TO THE GROUND RING WITH A #2 AWG SOLID TINNED COPPER CONDUCTOR AT AN INTERVAL NOT EXCEEDING 25 FEET. BONDS SHALL BE MADE AT EACH GATE POST AND ACROSS GATE OPENINGS. IF THE FENCE AND GATE IS IN-BUILDING OR ON ROOF IT SHALL BE BONDED TO THE MAIN BUSSBAR GROUNDING SYSTEM. USING #2 AWG STRANDED GREEN INSULATED COPPER CONDUCTOR

(N) EXTERIOR UNIT BONDS: METALLIC OBJECTS, EXTERNAL TO OR MOUNTED TO THE BUILDING, SHALL BE BONDED TO THE MAIN BUSSBAR GROUNDING SYSTEM. USING #2 AWG STRANDED GREEN INSULATED COPPER CONDUCTOR

(P) CABLE TRAYS: EACH SECTION SHALL BE BONDED TO THE NEXT WITH #2 AWG STRANDED GREEN INSULATED COPPER CONDUCTOR JUMPER. PROVIDE TWO HOLE LUGS AT BOTH ENDS OF THE JUMPER AND APPLY NO-OXIDIZING COMPOUND BETWEEN THE LUG AND CABLE TRAY. THE CABLE TRAY SHALL BE GROUNDED TO THE NEAREST BUSSBAR IN THE SAME MANNER.

(Q) DURING ALL DC POWER SYSTEM CHANGES INCLUDING DC SYSTEM CHANGE OUTS, RECTIFIER REPLACEMENTS OR ADDITIONS, BREAKER DISTRIBUTION CHANGES, BATTERY ADDITIONS, BATTERY REPLACEMENTS AND INSTALLATIONS OR CHANGES TO DC CONVERTER SYSTEMS IT SHALL BE REQUIRED THAT SERVICE CONTRACTORS VERIFY ALL DC POWER SYSTEMS ARE EQUIPPED WITH A MASTER DC SYSTEM RETURN GROUND CONDUCTOR FROM THE DC POWER SYSTEM COMMON RETURN BUS DIRECTLY CONNECTED TO THE CELL SITE REFERENCE GROUND BAR

(R) ALL ROOFTOP BUSSBARS ARE TO BE MECHANICALLY BONDED TO PROPOSED ANTENNA MOUNT.

REFER TO DISH WIRELESS GROUNDING NOTES.

GROUNDING KEY NOTES | NO SCALE | 2

dish WIRELESS
5701 SOUTH SANTA FE DRIVE
LITTLETON, CO 80120

BUTLER America Telecom LLC
1511 E. ORANGETHORPE AVE., SUITE D
FULLERTON, CA 92831

CDG
22431 ANTONIO PKWY
SUITE B160-131
RANCHO SANTA MARGARITA CA 92688
dconnell@connelldesigngroup.com
949-306-4644

REGISTERED PROFESSIONAL ENGINEER
DANIEL MICHAEL CONNELL
NO. 62543
EXP. 12/31/23
CIVIL
STATE OF CALIFORNIA

DATE STAMPED: 08/12/2022

IT IS A VIOLATION OF LAW FOR ANY PERSON, UNLESS THEY ARE ACTING UNDER THE DIRECTION OF A LICENSED PROFESSIONAL ENGINEER, TO ALTER THIS DOCUMENT.

DRAWN BY:	CHECKED BY:	APPROVED BY:
LE	JPC	DC

RFDS REV #1 DATED 04/05/2022

CONSTRUCTION DOCUMENTS

SUBMITTALS

REV	DATE	DESCRIPTION
A	07/25/2022	ISSUED FOR 90% CD REVIEW
0	08/11/2022	ISSUED FOR 90% CD REVIEW

(VENDOR) PROJECT NUMBER
SFSF001108B

DISH WIRELESS PROJECT NUMBER
SFSF001108B

761 NEESON RD.
MARINA, CA 93933
ROOFTOP

SHEET TITLE
GROUNDING PLANS AND NOTES

SHEET NUMBER
G-1

Exhibit B to Lease

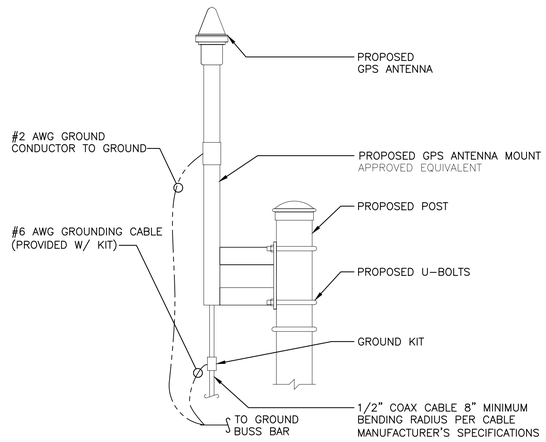

TYPICAL GPS UNIT GROUNDING | NO SCALE | 1

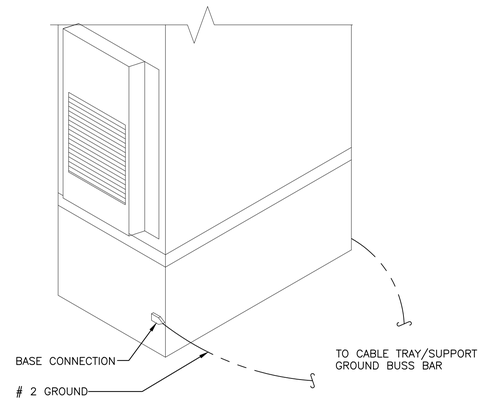

OUTDOOR CABINET GROUNDING | NO SCALE | 2

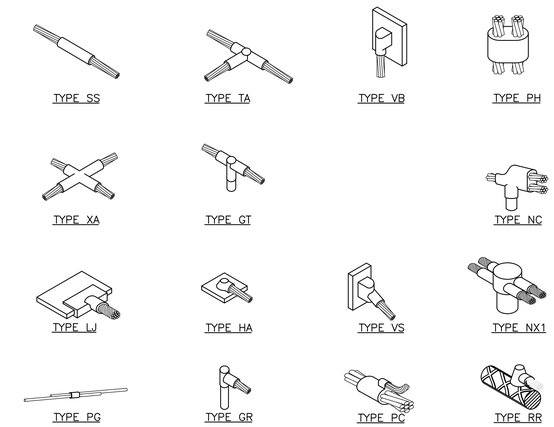

CADWELD CONNECTIONS | NO SCALE | 3

1. EXOTHERMIC WELD (2) TWO, #2 AWG BARE TINNED SOLID COPPER CONDUCTORS TO GROUND BAR. ROUTE CONDUCTORS TO BURIED GROUND RING AND PROVIDE PARALLEL EXOTHERMIC WELD.
2. ALL GROUND BARS SHALL BE STAMPED IN TO THE METAL "IF STOLEN DO NOT RECYCLE." THE CONTRACTOR SHALL USE PERMANENT MARKER TO DRAW THE LINES BETWEEN EACH SECTION AND LABEL EACH SECTION ("P", "A", "I") WITH 1" HIGH LETTERS.
3. ALL HARDWARE SHALL BE STAINLESS STEEL 3/8" DIAMETER OR LARGER. ALL HARDWARE 18-8 STAINLESS STEEL INCLUDING LOCK WASHERS, COAT ALL SURFACES WITH AN ANTI-OXIDANT COMPOUND BEFORE MATING.
4. FOR GROUND BOND TO STEEL ONLY: INSERT A CADMIUM FLAT WASHER BETWEEN LUG AND STEEL, COAT ALL SURFACES WITH AN ANTI-OXIDANT COMPOUND BEFORE MATING.
5. DO NOT INSTALL CABLE GROUNDING KIT AT A BEND AND ALWAYS DIRECT GROUND CONDUCTOR DOWN TO GROUNDING BUS.
6. NUT & WASHER SHALL BE PLACED ON THE FRONT SIDE OF THE GROUND BAR AND BOLTED ON THE BACK SIDE.
7. ALL GROUNDING PARTS AND EQUIPMENT TO BE SUPPLIED AND INSTALLED BY CONTRACTOR.
8. THE CONTRACTOR SHALL BE RESPONSIBLE FOR INSTALLING ADDITIONAL GROUND BAR AS REQUIRED, PROVIDING 50% SPARE CONNECTION POINTS.
9. ENSURE THE WIRE INSULATION TERMINATION IS WITHIN 1/8" OF THE BARREL (NO SHINERS).

TYPICAL GROUNDING NOTES | NO SCALE | 4

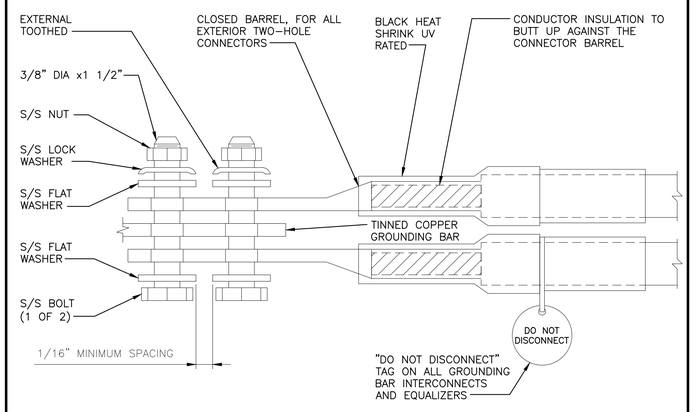

TYPICAL EXTERIOR TWO HOLE LUG | NO SCALE | 5

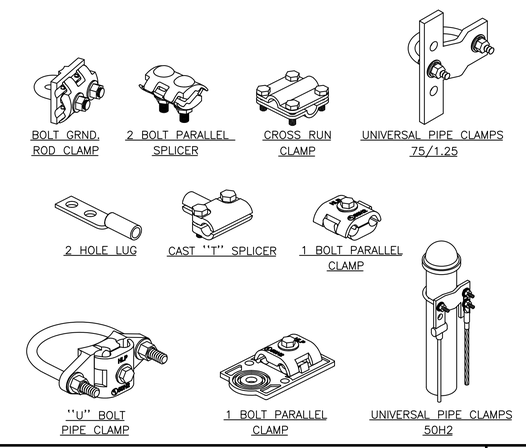

MECHANICAL CONNECTIONS | NO SCALE | 6

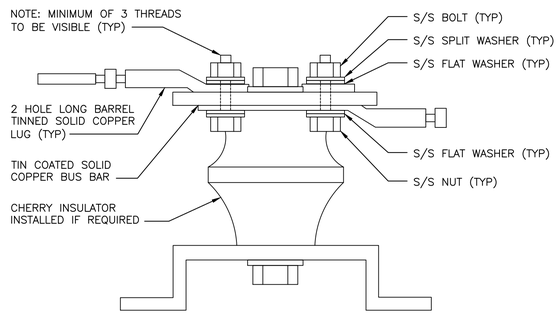

LUG DETAIL | NO SCALE | 7

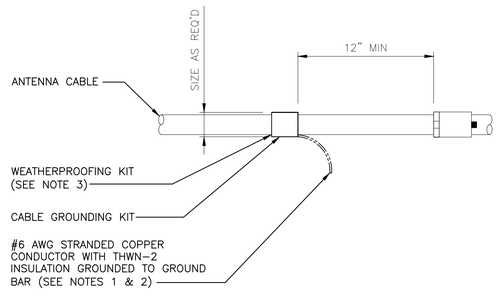

CONNECTION OF HYBRID CABLE GROUNDING KIT TO HYBRID TRUNK | NO SCALE | 8

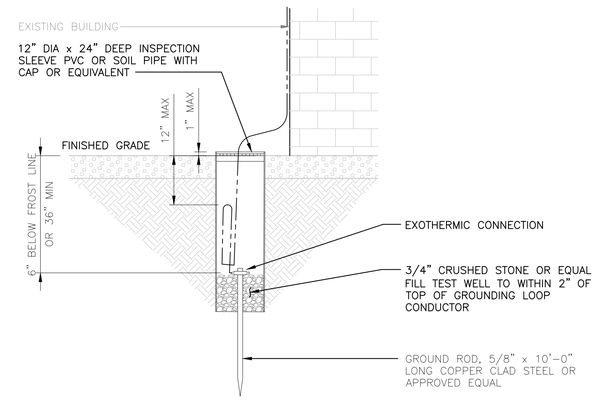

TYPICAL GROUND ROD WITH INSPECTION SLEEVE DETAIL | NO SCALE | 9

dish WIRELESS
5701 SOUTH SANTA FE DRIVE
LITTLETON, CO 80120

BUTLER America Telecom LLC
1511 E. ORANGETHORPE AVE., SUITE D
FULLERTON, CA 92831

CDG
22431 ANTONIO PKWY
SUITE B160-131
RANCHO SANTA MARGARITA CA 92688
dconnell@connelldesigngroup.com
949-306-4644

REGISTERED PROFESSIONAL ENGINEER DANIEL MICHAEL CONNELL NO. 62543 EXP. 12/31/23 CIVIL STATE OF CALIFORNIA

DATE STAMPED: 08/12/2022

IT IS A VIOLATION OF LAW FOR ANY PERSON, UNLESS THEY ARE ACTING UNDER THE DIRECTION OF A LICENSED PROFESSIONAL ENGINEER, TO ALTER THIS DOCUMENT.

DRAWN BY:	CHECKED BY:	APPROVED BY:
LE	JPC	DC

RFDS REV #1 DATED 04/05/2022

CONSTRUCTION DOCUMENTS

SUBMITTALS

REV	DATE	DESCRIPTION
A	07/25/2022	ISSUED FOR 90% CD REVIEW
0	08/11/2022	ISSUED FOR 90% CD REVIEW

(VENDOR) PROJECT NUMBER
SFSF001108B

DISH WIRELESS PROJECT NUMBER
SFSF001108B

761 NEESON RD.
MARINA, CA 93933
ROOFTOP

SHEET TITLE
GROUNDING DETAILS

SHEET NUMBER
G-2

RF EQUIPMENT INFORMATION

Issue Date/Revision	4/5/2022 — Revision: 1	Latitude	36.6788
Site ID	SFSF001108B	Longitude	-121.764
Site Address	761 Neeson Rd, Marina CA 93933	Prequal Asset ID	
Structure Type	Rooftop	SOW / RF Comments	Dish proposes to place 3 antennas, 6 RRUs, 1 junction box(s), and 3 (power/hybrid) cable(s), at the 62 foot RAD. Dish will require a 5x7 lease area for ground equipment. Use (2) Antennas and (4) Radios per sector for coring drawings. (3) Sectors total
sectors >20' apart?	No — Confirmed RAD? No Confirmed RAD — 62		

	Sector 1 (alpha)			Sector 2 (beta)			Sector 3 (gamma)		
ANTENNA									
Antenna Mount Position	1	2	3	1	2	3	1	2	3
Antenna ID		1			2			3	
Manufacturer		JMA			JMA			JMA	
Model Number		MX08FRO665-21			MX08FRO665-21			MX08FRO665-21	
Dimensions H x W x D (in)		72.0" x 20.0" x 8.0"			72.0" x 20.0" x 8.0"			72.0" x 20.0" x 8.0"	
Weight (lbs.)		64.5			64.5			64.5	
TX Power Output (watts)		40000			40000			40000	
EIRP (dBm)		76.02			76.02			76.02	
RAD Centerline Height (ft.)		62			62			62	
Azimuths (True North)		0°			140°			260°	
Mech Down Tilt		0°			0°			0°	
Default Mount		Generic							
LOW BAND/RADIO #1									
Manufacturer		MTI			MTI			MTI	
Model Number		G060708-50-02B			G060708-50-02B			G060708-50-02B	
Dimensions H x W x D (in.)		16.93" x 13.89" x 11.1"			16.93" x 13.89" x 11.1"			16.93" x 13.89" x 11.1"	
Weight (lbs.)		97			97			97	
Location		Cabinet			Cabinet			Cabinet	
Band		n71 |			n71 |			n71 |	
Quantity		1			1			1	
Port Assignment		Port 1-4			Port 1-4			Port 1-4	
Elec Down Tilt		2°			2°			2°	
MID BAND/RADIO #2									
Manufacturer		MTI			MTI			MTI	
Model Number		G2021-49-02B			G2021-49-02B			G2021-49-02B	
Dimensions H x W x D (in)		16.93" x 13.89" x 9.84"			16.93" x 13.89" x 9.84"			16.93" x 13.89" x 9.84"	
Weight (lbs.)		85.98			85.98			85.98	
Location		Cabinet			Cabinet			Cabinet	
Quantity		1			1			1	
Band		n70 |n66			n70 |n66			n70 |n66	
Port Assignment		Port 5-8			Port 5-8			Port 5-8	
Elec Down Tilt		2°			2°			2°	
OVP (Junction Box)									
Manufacturer		Raycap							
Model Number		RDIDC-9181-PF-48							
Dimensions H x W x D (in.)		18.97" x 16.20" x 9.6"							
Weight (lbs.)		21.85							
Quantity		1							
LINE DETAILS									
Line Type	Hybrid								
Manufacturer	Cables Unlimited								
Model Number	CU52PSMRP890X_8AWG-								
Diameter (O.D. in.)	1.411"								
Weight (lbs. per ft.)	1.658 lbs/ft								
Quantity	1								
Approx. Cable Length	92								
OTHER EQUIPMENT									
Type of Equipment									
Manufacturer									
Model Number									
Dimensions H x W x D (in)									
Weight (lbs.)									
Equipment Location									
Quantity									

Frequencies	n29	n66	n70	n71
Downlink (TX)	0 - 0	2180 - 2200	1995 - 2020	637 - 652
Uplink (RX)			1915 - 1920	683 - 698

PLUMBING DIAGRAM ANTENNA

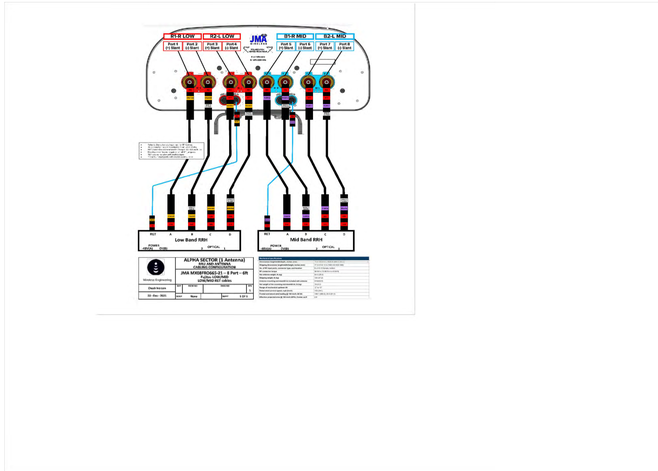

PLUMBING DIAGRAM OVP

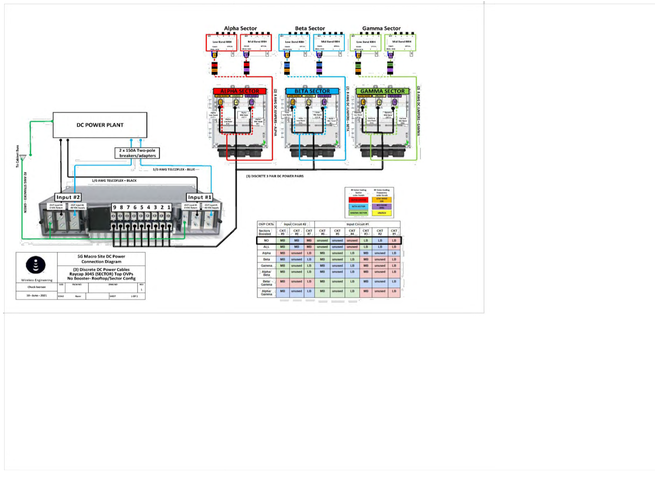

PLUMBING DIAGRAM NETWORK

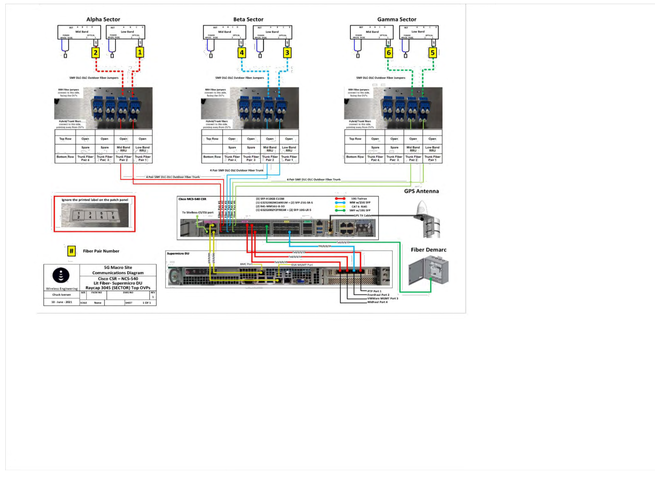

dish WIRELESS
5701 SOUTH SANTA FE DRIVE
LITTLETON, CO 80120

BUTLER America Telecom LLC
1511 E. ORANGETHORPE AVE., SUITE D
FULLERTON, CA 92831

CDG
22431 ANTONIO PKWY
SUITE B160-131
RANCHO SANTA MARGARITA CA 92688
dconnell@connelldesigngroup.com
949-306-4644

REGISTERED PROFESSIONAL ENGINEER
DANIEL MICHAEL CONNELL
NO. 62543
EXP. 12/31/23
CIVIL
STATE OF CALIFORNIA

DATE STAMPED: 08/12/2022

IT IS A VIOLATION OF LAW FOR ANY PERSON, UNLESS THEY ARE ACTING UNDER THE DIRECTION OF A LICENSED PROFESSIONAL ENGINEER, TO ALTER THIS DOCUMENT.

DRAWN BY:	CHECKED BY:	APPROVED BY:
LE	JPC	DC

RFDS REV #1 DATED 04/05/2022

CONSTRUCTION DOCUMENTS

SUBMITTALS

REV	DATE	DESCRIPTION
A	07/25/2022	ISSUED FOR 90% CD REVIEW
0	08/11/2022	ISSUED FOR 90% CD REVIEW

(VENDOR) PROJECT NUMBER
SFSF001108B

DISH WIRELESS PROJECT NUMBER
SFSF001108B

761 NEESON RD.
MARINA, CA 93933
ROOFTOP

SHEET TITLE
RF DATA

SHEET NUMBER
RF-1

EXOTHERMIC CONNECTION
MECHANICAL CONNECTION
CHEMICAL ELECTROLYTIC GROUNDING SYSTEM
TEST CHEMICAL ELECTROLYTIC GROUNDING SYSTEM
EXOTHERMIC WITH INSPECTION SLEEVE
GROUNDING BAR
GROUND ROD
TEST GROUND ROD WITH INSPECTION SLEEVE
SINGLE POLE SWITCH
DUPLEX RECEPTACLE
DUPLEX GFCI RECEPTACLE
FLUORESCENT LIGHTING FIXTURE (2) TWO LAMPS 48–T8
SMOKE DETECTION (DC)
EMERGENCY LIGHTING (DC)
SECURITY LIGHT W/PHOTOCELL LITHONIA ALXW LED–1–25A400/51K–SR4–120–PE–DDBTXD
CHAIN LINK FENCE
WOOD/WROUGHT IRON FENCE
WALL STRUCTURE
LEASE AREA
PROPERTY LINE (PL)
SETBACKS
ICE BRIDGE
CABLE TRAY
WATER LINE
UNDERGROUND POWER
UNDERGROUND TELCO
OVERHEAD POWER
OVERHEAD TELCO
UNDERGROUND TELCO/POWER
ABOVE GROUND POWER
ABOVE GROUND TELCO
ABOVE GROUND TELCO/POWER
WORKPOINT
SECTION REFERENCE
DETAIL REFERENCE

LEGEND

AB	ANCHOR BOLT
ABV	ABOVE
AC	ALTERNATING CURRENT
ADDL	ADDITIONAL
AFF	ABOVE FINISHED FLOOR
AFG	ABOVE FINISHED GRADE
AGL	ABOVE GROUND LEVEL
AIC	AMPERAGE INTERRUPTION CAPACITY
ALUM	ALUMINUM
ALT	ALTERNATE
ANT	ANTENNA
APPROX	APPROXIMATE
ARCH	ARCHITECTURAL
ATS	AUTOMATIC TRANSFER SWITCH
AWG	AMERICAN WIRE GAUGE
BATT	BATTERY
BLDG	BUILDING
BLK	BLOCK
BLKG	BLOCKING
BM	BEAM
BTC	BARE TINNED COPPER CONDUCTOR
BOF	BOTTOM OF FOOTING
CAB	CABINET
CANT	CANTILEVERED
CHG	CHARGING
CLG	CEILING
CLR	CLEAR
COL	COLUMN
COMM	COMMON
CONC	CONCRETE
CONSTR	CONSTRUCTION
DBL	DOUBLE
DC	DIRECT CURRENT
DEPT	DEPARTMENT
DF	DOUGLAS FIR
DIA	DIAMETER
DIAG	DIAGONAL
DIM	DIMENSION
DWG	DRAWING
DWL	DOWEL
EA	EACH
EC	ELECTRICAL CONDUCTOR
EL.	ELEVATION
ELEC	ELECTRICAL
EMT	ELECTRICAL METALLIC TUBING
ENG	ENGINEER
EQ	EQUAL
EXP	EXPANSION
EXT	EXTERIOR
EW	EACH WAY
FAB	FABRICATION
FF	FINISH FLOOR
FG	FINISH GRADE
FIF	FACILITY INTERFACE FRAME
FIN	FINISH(ED)
FLR	FLOOR
FDN	FOUNDATION
FOC	FACE OF CONCRETE
FOM	FACE OF MASONRY
FOS	FACE OF STUD
FOW	FACE OF WALL
FS	FINISH SURFACE
FT	FOOT
FTG	FOOTING
GA	GAUGE
GEN	GENERATOR
GFCI	GROUND FAULT CIRCUIT INTERRUPTER
GLB	GLUE LAMINATED BEAM
GLV	GALVANIZED
GPS	GLOBAL POSITIONING SYSTEM
GND	GROUND
GSM	GLOBAL SYSTEM FOR MOBILE
HDG	HOT DIPPED GALVANIZED
HDR	HEADER
HGR	HANGER
HVAC	HEAT/VENTILATION/AIR CONDITIONING
HT	HEIGHT
IGR	INTERIOR GROUND RING
IN	INCH
INT	INTERIOR
LB(S)	POUND(S)
LF	LINEAR FEET
LTE	LONG TERM EVOLUTION
MAS	MASONRY
MAX	MAXIMUM
MB	MACHINE BOLT
MECH	MECHANICAL
MFR	MANUFACTURER
MGB	MASTER GROUND BAR
MIN	MINIMUM
MISC	MISCELLANEOUS
MTL	METAL
MTS	MANUAL TRANSFER SWITCH
MW	MICROWAVE
NEC	NATIONAL ELECTRIC CODE
NM	NEWTON METERS
NO.	NUMBER
#	NUMBER
NTS	NOT TO SCALE
OC	ON–CENTER
OSHA	OCCUPATIONAL SAFETY AND HEALTH ADMINISTRATION
OPNG	OPENING
P/C	PRECAST CONCRETE
PCS	PERSONAL COMMUNICATION SERVICES
PCU	PRIMARY CONTROL UNIT
PRC	PRIMARY RADIO CABINET
PP	POLARIZING PRESERVING
PSF	POUNDS PER SQUARE FOOT
PSI	POUNDS PER SQUARE INCH
PT	PRESSURE TREATED
PWR	POWER CABINET
QTY	QUANTITY
RAD	RADIUS
RECT	RECTIFIER
REF	REFERENCE
REINF	REINFORCEMENT
REQ'D	REQUIRED
RET	REMOTE ELECTRIC TILT
RF	RADIO FREQUENCY
RMC	RIGID METALLIC CONDUIT
RRH	REMOTE RADIO HEAD
RRU	REMOTE RADIO UNIT
RWY	RACEWAY
SCH	SCHEDULE
SHT	SHEET
SIAD	SMART INTEGRATED ACCESS DEVICE
SIM	SIMILAR
SPEC	SPECIFICATION
SQ	SQUARE
SS	STAINLESS STEEL
STD	STANDARD
STL	STEEL
TEMP	TEMPORARY
THK	THICKNESS
TMA	TOWER MOUNTED AMPLIFIER
TN	TOE NAIL
TOA	TOP OF ANTENNA
TOC	TOP OF CURB
TOF	TOP OF FOUNDATION
TOP	TOP OF PLATE (PARAPET)
TOS	TOP OF STEEL
TOW	TOP OF WALL
TVSS	TRANSIENT VOLTAGE SURGE SUPPRESSION
TYP	TYPICAL
UG	UNDERGROUND
UL	UNDERWRITERS LABORATORY
UNO	UNLESS NOTED OTHERWISE
UMTS	UNIVERSAL MOBILE TELECOMMUNICATIONS SYSTEM
UPS	UNITERRUPTIBLE POWER SYSTEM (DC POWER PLANT)
VIF	VERIFIED IN FIELD
W	WIDE
W/	WITH
WD	WOOD
WP	WEATHERPROOF
WT	WEIGHT

ABBREVIATIONS

dish WIRELESS
5701 SOUTH SANTA FE DRIVE
LITTLETON, CO 80120

BUTLER America Telecom LLC
1511 E. ORANGETHORPE AVE., SUITE D
FULLERTON, CA 92831

CDG
22431 ANTONIO PKWY
SUITE B160–131
RANCHO SANTA MARGARITA CA 92688
dconnell@connelldesigngroup.com
949–306–4644

REGISTERED PROFESSIONAL ENGINEER
DANIEL MICHAEL CONNELL
NO. 62543
EXP. 12/31/23
CIVIL
STATE OF CALIFORNIA

DATE STAMPED: 08/12/2022

IT IS A VIOLATION OF LAW FOR ANY PERSON, UNLESS THEY ARE ACTING UNDER THE DIRECTION OF A LICENSED PROFESSIONAL ENGINEER, TO ALTER THIS DOCUMENT.

DRAWN BY:	CHECKED BY:	APPROVED BY:
LE	JPC	DC

RFDS REV #1 DATED 04/05/2022

CONSTRUCTION DOCUMENTS

SUBMITTALS

REV	DATE	DESCRIPTION
A	07/25/2022	ISSUED FOR 90% CD REVIEW
0	08/11/2022	ISSUED FOR 90% CD REVIEW

(VENDOR) PROJECT NUMBER
SFSF001108B

DISH WIRELESS PROJECT NUMBER
SFSF001108B

761 NEESON RD.
MARINA, CA 93933
ROOFTOP

SHEET TITLE
LEGEND AND ABBREVIATIONS

SHEET NUMBER
GN-1

SITE ACTIVITY REQUIREMENTS:

1. NOTICE TO PROCEED – NO WORK SHALL COMMENCE PRIOR TO CONTRACTOR RECEIVING A WRITTEN NOTICE TO PROCEED (NTP) AND THE ISSUANCE OF A PURCHASE ORDER. PRIOR TO ACCESSING/ENTERING THE SITE YOU MUST CONTACT THE DISH WIRELESS AND TOWER OWNER NOC & THE DISH WIRELESS AND TOWER OWNER CONSTRUCTION MANAGER.

2. "LOOK UP" – DISH WIRELESS AND TOWER OWNER SAFETY CLIMB REQUIREMENT:

THE INTEGRITY OF THE SAFETY CLIMB AND ALL COMPONENTS OF THE CLIMBING FACILITY SHALL BE CONSIDERED DURING ALL STAGES OF DESIGN, INSTALLATION, AND INSPECTION. TOWER MODIFICATION, MOUNT REINFORCEMENTS, AND/OR EQUIPMENT INSTALLATIONS SHALL NOT COMPROMISE THE INTEGRITY OR FUNCTIONAL USE OF THE SAFETY CLIMB OR ANY COMPONENTS OF THE CLIMBING FACILITY ON THE STRUCTURE. THIS SHALL INCLUDE, BUT NOT BE LIMITED TO: PINCHING OF THE WIRE ROPE, BENDING OF THE WIRE ROPE FROM ITS SUPPORTS, DIRECT CONTACT OR CLOSE PROXIMITY TO THE WIRE ROPE WHICH MAY CAUSE FRICTIONAL WEAR, IMPACT TO THE ANCHORAGE POINTS IN ANY WAY, OR TO IMPEDE/BLOCK ITS INTENDED USE. ANY COMPROMISED SAFETY CLIMB, INCLUDING EXISTING CONDITIONS MUST BE TAGGED OUT AND REPORTED TO YOUR DISH WIRELESS AND DISH WIRELESS AND TOWER OWNER POC OR CALL THE NOC TO GENERATE A SAFETY CLIMB MAINTENANCE AND CONTRACTOR NOTICE TICKET.

3. PRIOR TO THE START OF CONSTRUCTION, ALL REQUIRED JURISDICTIONAL PERMITS SHALL BE OBTAINED. THIS INCLUDES, BUT IS NOT LIMITED TO, BUILDING, ELECTRICAL, MECHANICAL, FIRE, FLOOD ZONE, ENVIRONMENTAL, AND ZONING. AFTER ONSITE ACTIVITIES AND CONSTRUCTION ARE COMPLETED, ALL REQUIRED PERMITS SHALL BE SATISFIED AND CLOSED OUT ACCORDING TO LOCAL JURISDICTIONAL REQUIREMENTS.

4. ALL CONSTRUCTION MEANS AND METHODS; INCLUDING BUT NOT LIMITED TO, ERECTION PLANS, RIGGING PLANS, CLIMBING PLANS, AND RESCUE PLANS SHALL BE THE RESPONSIBILITY OF THE GENERAL CONTRACTOR RESPONSIBLE FOR THE EXECUTION OF THE WORK CONTAINED HEREIN, AND SHALL MEET ANSI/ASSE A10.48 (LATEST EDITION); FEDERAL, STATE, AND LOCAL REGULATIONS; AND ANY APPLICABLE INDUSTRY CONSENSUS STANDARDS RELATED TO THE CONSTRUCTION ACTIVITIES BEING PERFORMED. ALL RIGGING PLANS SHALL ADHERE TO ANSI/ASSE A10.48 (LATEST EDITION) AND DISH WIRELESS AND TOWER OWNER STANDARDS, INCLUDING THE REQUIRED INVOLVEMENT OF A QUALIFIED ENGINEER FOR CLASS IV CONSTRUCTION, TO CERTIFY THE SUPPORTING STRUCTURE(S) IN ACCORDANCE WITH ANSI/TIA–322 (LATEST EDITION).

5. ALL SITE WORK TO COMPLY WITH DISH WIRELESS AND TOWER OWNER INSTALLATION STANDARDS FOR CONSTRUCTION ACTIVITIES ON DISH WIRELESS AND TOWER OWNER TOWER SITE AND LATEST VERSION OF ANSI/TIA–1019–A–2012 "STANDARD FOR INSTALLATION, ALTERATION, AND MAINTENANCE OF ANTENNA SUPPORTING STRUCTURES AND ANTENNAS."

6. IF THE SPECIFIED EQUIPMENT CAN NOT BE INSTALLED AS SHOWN ON THESE DRAWINGS, THE CONTRACTOR SHALL PROPOSE AN ALTERNATIVE INSTALLATION FOR APPROVAL BY DISH WIRELESS AND TOWER OWNER PRIOR TO PROCEEDING WITH ANY SUCH CHANGE OF INSTALLATION.

7. ALL MATERIALS FURNISHED AND INSTALLED SHALL BE IN STRICT ACCORDANCE WITH ALL APPLICABLE CODES, REGULATIONS AND ORDINANCES. CONTRACTOR SHALL ISSUE ALL APPROPRIATE NOTICES AND COMPLY WITH ALL LAWS, ORDINANCES, RULES, REGULATIONS AND LAWFUL ORDERS OF ANY PUBLIC AUTHORITY REGARDING THE PERFORMANCE OF THE WORK. ALL WORK CARRIED OUT SHALL COMPLY WITH ALL APPLICABLE MUNICIPAL AND UTILITY COMPANY SPECIFICATIONS AND LOCAL JURISDICTIONAL CODES, ORDINANCES AND APPLICABLE REGULATIONS.

8. THE CONTRACTOR SHALL INSTALL ALL EQUIPMENT AND MATERIALS IN ACCORDANCE WITH MANUFACTURER'S RECOMMENDATIONS UNLESS SPECIFICALLY STATED OTHERWISE.

9. THE CONTRACTOR SHALL CONTACT UTILITY LOCATING SERVICES INCLUDING PRIVATE LOCATES SERVICES PRIOR TO THE START OF CONSTRUCTION.

10. ALL EXISTING ACTIVE SEWER, WATER, GAS, ELECTRIC AND OTHER UTILITIES WHERE ENCOUNTERED IN THE WORK, SHALL BE PROTECTED AT ALL TIMES AND WHERE REQUIRED FOR THE PROPER EXECUTION OF THE WORK, SHALL BE RELOCATED AS DIRECTED BY CONTRACTOR. EXTREME CAUTION SHOULD BE USED BY THE CONTRACTOR WHEN EXCAVATING OR DRILLING PIERS AROUND OR NEAR UTILITIES. CONTRACTOR SHALL PROVIDE SAFETY TRAINING FOR THE WORKING CREW. THIS WILL INCLUDE BUT NOT BE LIMITED TO A) FALL PROTECTION B) CONFINED SPACE C) ELECTRICAL SAFETY D) TRENCHING AND EXCAVATION E) CONSTRUCTION SAFETY PROCEDURES.

11. ALL SITE WORK SHALL BE AS INDICATED ON THE STAMPED CONSTRUCTION DRAWINGS AND DISH PROJECT SPECIFICATIONS, LATEST APPROVED REVISION.

12. CONTRACTOR SHALL KEEP THE SITE FREE FROM ACCUMULATING WASTE MATERIAL, DEBRIS, AND TRASH AT THE COMPLETION OF THE WORK. IF NECESSARY, RUBBISH, STUMPS, DEBRIS, STICKS, STONES AND OTHER REFUSE SHALL BE REMOVED FROM THE SITE AND DISPOSED OF LEGALLY.

13. ALL EXISTING INACTIVE SEWER, WATER, GAS, ELECTRIC AND OTHER UTILITIES, WHICH INTERFERE WITH THE EXECUTION OF THE WORK, SHALL BE REMOVED AND/OR CAPPED, PLUGGED OR OTHERWISE DISCONTINUED AT POINTS WHICH WILL NOT INTERFERE WITH THE EXECUTION OF THE WORK, SUBJECT TO THE APPROVAL OF DISH WIRELESS AND TOWER OWNER, AND/OR LOCAL UTILITIES.

14. THE CONTRACTOR SHALL PROVIDE SITE SIGNAGE IN ACCORDANCE WITH THE TECHNICAL SPECIFICATION FOR SITE SIGNAGE REQUIRED BY LOCAL JURISDICTION AND SIGNAGE REQUIRED ON INDIVIDUAL PIECES OF EQUIPMENT, ROOMS, AND SHELTERS.

15. THE SITE SHALL BE GRADED TO CAUSE SURFACE WATER TO FLOW AWAY FROM THE CARRIER'S EQUIPMENT AND TOWER AREAS.

16. THE SUB GRADE SHALL BE COMPACTED AND BROUGHT TO A SMOOTH UNIFORM GRADE PRIOR TO FINISHED SURFACE APPLICATION.

17. THE AREAS OF THE OWNERS PROPERTY DISTURBED BY THE WORK AND NOT COVERED BY THE TOWER, EQUIPMENT OR DRIVEWAY, SHALL BE GRADED TO A UNIFORM SLOPE, AND STABILIZED TO PREVENT EROSION AS SPECIFIED ON THE CONSTRUCTION DRAWINGS AND/OR PROJECT SPECIFICATIONS.

18. CONTRACTOR SHALL MINIMIZE DISTURBANCE TO EXISTING SITE DURING CONSTRUCTION. EROSION CONTROL MEASURES, IF REQUIRED DURING CONSTRUCTION, SHALL BE IN CONFORMANCE WITH THE LOCAL GUIDELINES FOR EROSION AND SEDIMENT CONTROL.

19. THE CONTRACTOR SHALL PROTECT EXISTING IMPROVEMENTS, PAVEMENTS, CURBS, LANDSCAPING AND STRUCTURES. ANY DAMAGED PART SHALL BE REPAIRED AT CONTRACTOR'S EXPENSE TO THE SATISFACTION OF OWNER.

20. CONTRACTOR SHALL LEGALLY AND PROPERLY DISPOSE OF ALL SCRAP MATERIALS SUCH AS COAXIAL CABLES AND OTHER ITEMS REMOVED FROM THE EXISTING FACILITY. ANTENNAS AND RADIOS REMOVED SHALL BE RETURNED TO THE OWNER'S DESIGNATED LOCATION.

21. CONTRACTOR SHALL LEAVE PREMISES IN CLEAN CONDITION. TRASH AND DEBRIS SHOULD BE REMOVED FROM SITE ON A DAILY BASIS.

22. NO FILL OR EMBANKMENT MATERIAL SHALL BE PLACED ON FROZEN GROUND. FROZEN MATERIALS, SNOW OR ICE SHALL NOT BE PLACED IN ANY FILL OR EMBANKMENT.

GENERAL NOTES:

1.FOR THE PURPOSE OF CONSTRUCTION DRAWING, THE FOLLOWING DEFINITIONS SHALL APPLY:

CONTRACTOR:GENERAL CONTRACTOR RESPONSIBLE FOR CONSTRUCTION

CARRIER:DISH WIRELESS

TOWER OWNER:TOWER OWNER

2. THESE DRAWINGS HAVE BEEN PREPARED USING STANDARDS OF PROFESSIONAL CARE AND COMPLETENESS NORMALLY EXERCISED UNDER SIMILAR CIRCUMSTANCES BY REPUTABLE ENGINEERS IN THIS OR SIMILAR LOCALITIES. IT IS ASSUMED THAT THE WORK DEPICTED WILL BE PERFORMED BY AN EXPERIENCED CONTRACTOR AND/OR WORKPEOPLE WHO HAVE A WORKING KNOWLEDGE OF THE APPLICABLE CODE STANDARDS AND REQUIREMENTS AND OF INDUSTRY ACCEPTED STANDARD GOOD PRACTICE. AS NOT EVERY CONDITION OR ELEMENT IS (OR CAN BE) EXPLICITLY SHOWN ON THESE DRAWINGS, THE CONTRACTOR SHALL USE INDUSTRY ACCEPTED STANDARD GOOD PRACTICE FOR MISCELLANEOUS WORK NOT EXPLICITLY SHOWN.

3. THESE DRAWINGS REPRESENT THE FINISHED STRUCTURE. THEY DO NOT INDICATE THE MEANS OR METHODS OF CONSTRUCTION. THE CONTRACTOR SHALL BE SOLELY RESPONSIBLE FOR THE CONSTRUCTION MEANS, METHODS, TECHNIQUES, SEQUENCES, AND PROCEDURES. THE CONTRACTOR SHALL PROVIDE ALL MEASURES NECESSARY FOR PROTECTION OF LIFE AND PROPERTY DURING CONSTRUCTION. SUCH MEASURES SHALL INCLUDE, BUT NOT BE LIMITED TO, BRACING, FORMWORK, SHORING, ETC. SITE VISITS BY THE ENGINEER OR HIS REPRESENTATIVE WILL NOT INCLUDE INSPECTION OF THESE ITEMS AND IS FOR STRUCTURAL OBSERVATION OF THE FINISHED STRUCTURE ONLY.

4. NOTES AND DETAILS IN THE CONSTRUCTION DRAWINGS SHALL TAKE PRECEDENCE OVER GENERAL NOTES AND TYPICAL DETAILS. WHERE NO DETAILS ARE SHOWN, CONSTRUCTION SHALL CONFORM TO SIMILAR WORK ON THE PROJECT, AND/OR AS PROVIDED FOR IN THE CONTRACT DOCUMENTS. WHERE DISCREPANCIES OCCUR BETWEEN PLANS, DETAILS, GENERAL NOTES, AND SPECIFICATIONS, THE GREATER, MORE STRICT REQUIREMENTS, SHALL GOVERN. IF FURTHER CLARIFICATION IS REQUIRED CONTACT THE ENGINEER OF RECORD.

5. SUBSTANTIAL EFFORT HAS BEEN MADE TO PROVIDE ACCURATE DIMENSIONS AND MEASUREMENTS ON THE DRAWINGS TO ASSIST IN THE FABRICATION AND/OR PLACEMENT OF CONSTRUCTION ELEMENTS BUT IT IS THE SOLE RESPONSIBILITY OF THE CONTRACTOR TO FIELD VERIFY THE DIMENSIONS, MEASUREMENTS, AND/OR CLEARANCES SHOWN IN THE CONSTRUCTION DRAWINGS PRIOR TO FABRICATION OR CUTTING OF ANY NEW OR EXISTING CONSTRUCTION ELEMENTS. IF IT IS DETERMINED THAT THERE ARE DISCREPANCIES AND/OR CONFLICTS WITH THE CONSTRUCTION DRAWINGS THE ENGINEER OF RECORD IS TO BE NOTIFIED AS SOON AS POSSIBLE.

6. PRIOR TO THE SUBMISSION OF BIDS, THE BIDDING CONTRACTOR SHALL VISIT THE CELL SITE TO FAMILIARIZE WITH THE EXISTING CONDITIONS AND TO CONFIRM THAT THE WORK CAN BE ACCOMPLISHED AS SHOWN ON THE CONSTRUCTION DRAWINGS. ANY DISCREPANCY FOUND SHALL BE BROUGHT TO THE ATTENTION OF CARRIER POC AND TOWER OWNER.

7. ALL MATERIALS FURNISHED AND INSTALLED SHALL BE IN STRICT ACCORDANCE WITH ALL APPLICABLE CODES, REGULATIONS AND ORDINANCES. CONTRACTOR SHALL ISSUE ALL APPROPRIATE NOTICES AND COMPLY WITH ALL LAWS, ORDINANCES, RULES, REGULATIONS AND LAWFUL ORDERS OF ANY PUBLIC AUTHORITY REGARDING THE PERFORMANCE OF THE WORK. ALL WORK CARRIED OUT SHALL COMPLY WITH ALL APPLICABLE MUNICIPAL AND UTILITY COMPANY SPECIFICATIONS AND LOCAL JURISDICTIONAL CODES, ORDINANCES AND APPLICABLE REGULATIONS.

8. UNLESS NOTED OTHERWISE, THE WORK SHALL INCLUDE FURNISHING MATERIALS, EQUIPMENT, APPURTENANCES AND LABOR NECESSARY TO COMPLETE ALL INSTALLATIONS AS INDICATED ON THE DRAWINGS.

9. THE CONTRACTOR SHALL INSTALL ALL EQUIPMENT AND MATERIALS IN ACCORDANCE WITH MANUFACTURER'S RECOMMENDATIONS UNLESS SPECIFICALLY STATED OTHERWISE.

10. IF THE SPECIFIED EQUIPMENT CAN NOT BE INSTALLED AS SHOWN ON THESE DRAWINGS, THE CONTRACTOR SHALL PROPOSE AN ALTERNATIVE INSTALLATION FOR APPROVAL BY THE CARRIER AND TOWER OWNER PRIOR TO PROCEEDING WITH ANY SUCH CHANGE OF INSTALLATION.

11. CONTRACTOR IS TO PERFORM A SITE INVESTIGATION, BEFORE SUBMITTING BIDS, TO DETERMINE THE BEST ROUTING OF ALL CONDUITS FOR POWER, AND TELCO AND FOR GROUNDING CABLES AS SHOWN IN THE POWER, TELCO, AND GROUNDING PLAN DRAWINGS.

12. THE CONTRACTOR SHALL PROTECT EXISTING IMPROVEMENTS, PAVEMENTS, CURBS, LANDSCAPING AND STRUCTURES. ANY DAMAGED PART SHALL BE REPAIRED AT CONTRACTOR'S EXPENSE TO THE SATISFACTION OF DISH WIRELESS AND TOWER OWNER

13. CONTRACTOR SHALL LEGALLY AND PROPERLY DISPOSE OF ALL SCRAP MATERIALS SUCH AS COAXIAL CABLES AND OTHER ITEMS REMOVED FROM THE EXISTING FACILITY. ANTENNAS REMOVED SHALL BE RETURNED TO THE OWNER'S DESIGNATED LOCATION.

14. CONTRACTOR SHALL LEAVE PREMISES IN CLEAN CONDITION. TRASH AND DEBRIS SHOULD BE REMOVED FROM SITE ON A DAILY BASIS.

DISCLAIMER NOTE:

THE DESIGN SHOWN IN THESE PLANS ASSUME THAT ALL EXISTING STRUCTURAL ITEMS ARE IN "LIKE NEW" CONDITION AND THAT THE STRUCTURES HAVE BEEN PROPERLY MAINTAINED BY THE OWNER, INCLUDING ALL TOWER AND BUILDING COMPONENTS.

INSTALLATION PROCEDURES AND RELATED LOADINGS ARE NOT WITHIN THE SCOPE OF THIS DESIGN/DRAWING. A CONTRACTOR EXPERIENCED IN SIMILAR WORK SHOULD PERFORM ALL INSTALLATION WORK. THE ENGINEERING SERVICES PROVIDED BY CDG ARE LIMITED TO THE DESIGN OF THE STRUCTURE WITH THE PROPOSED AND EXISTING LOADS. THESE DRAWINGS ARE CONSIDERED VOID IF THE LOADING MENTIONED IN THESE DRAWINGS IS CHANGED OR IS DIFFERENT AS INSTALLED. IT IS ASSUMED THAT THE EXISTING STRUCTURE IS PROPERLY MAINTAINED AND IS IN GOOD CONDITION FREE OF ANY DEFECTS. ALSO THE VERIFICATION OF ANCHORAGE, PLATE AND BOLTS ARE NOT CHECKED AS COMPLETE ENGINEERING DATA IN NOT AVAILABLE FOR VERIFICATION. THE SCOPE OF THESE DRAWINGS DOES NOT INCLUDE EXISTING CONNECTIONS, EXCEPT AS NOTED. ALL EXISTING & PROPOSED ANTENNA/STRUCTURE DATA WAS PROVIDED BY OWNER. CDG IS NOT RESPONSIBLE FOR THE ACCURACY OF ANY EXISTING DATA.

THESE DRAWINGS GENERATED BY CDG ARE FOR THE SCOPE GIVEN BY CDG, INC. AND THEIR CLIENT ONLY. WE DISCLAIM ANY RESPONSIBILITY OF THIS DRAWING BEING USED BY ANY PARTY OTHER THAN OUR CLIENT. CDG DOES NOT MAKE ANY WARRANTIES, EXPRESSED OR IMPLIED IN CONNECTION WITH THIS ENGINEERING DRAWING AND DISCLAIMS ANY LIABILITY ARISING FROM DEFICIENCIES OR ANY EXISTING CONDITIONS OF THE ORIGINAL STRUCTURE. CDG WILL NOT BE RESPONSIBLE FOR CONSEQUENTIAL OR INCIDENTAL DAMAGES SUSTAINED BY ANY PARTIES AS A RESULT OF ANY DATA OR CONCLUSIONS INCLUDED IN THIS DRAWING. THE MAXIMUM LIABILITY OF CDG PURSUANT TO THIS DRAWING SHALL BE LIMITED TO THE CONSULTING FEE RECEIVED FOR THE PREPARATION OF THE REPORT. ALL SERVICES ARE PERFORMED, RESULTS OBTAINED AND RECOMMENDATIONS MADE ARE IN ACCORDANCE WITH GENERALLY ACCEPTED ENGINEERING PRINCIPLES AND PRACTICES. CDG IS NOT RESPONSIBLE FOR THE CONCLUSIONS, OPINIONS AND RECOMMENDATIONS MADE BY OTHERS BASED ON THE INFORMATION OR DATA PROVIDED BY US.

dish WIRELESS
5701 SOUTH SANTA FE DRIVE
LITTLETON, CO 80120

BUTLER America Telecom LLC
1511 E. ORANGETHORPE AVE., SUITE D
FULLERTON, CA 92831

CDG
22431 ANTONIO PKWY
SUITE B160–131
RANCHO SANTA MARGARITA CA 92688
dconnell@connelldesigngroup.com
949–306–4644

REGISTERED PROFESSIONAL ENGINEER
DANIEL MICHAEL CONNELL
NO. 62543
EXP. 12/31/23
CIVIL
STATE OF CALIFORNIA

DATE STAMPED: 08/12/2022

IT IS A VIOLATION OF LAW FOR ANY PERSON, UNLESS THEY ARE ACTING UNDER THE DIRECTION OF A LICENSED PROFESSIONAL ENGINEER, TO ALTER THIS DOCUMENT.

DRAWN BY:	CHECKED BY:	APPROVED BY:
LE	JPC	DC

RFDS REV #1 DATED 04/05/2022

CONSTRUCTION DOCUMENTS

SUBMITTALS

REV	DATE	DESCRIPTION
A	07/25/2022	ISSUED FOR 90% CD REVIEW
0	08/11/2022	ISSUED FOR 90% CD REVIEW

(VENDOR) PROJECT NUMBER
SFSF001108B

DISH WIRELESS PROJECT NUMBER
SFSF001108B

761 NEESON RD.
MARINA, CA 93933
ROOFTOP

SHEET TITLE
GENERAL NOTES

SHEET NUMBER
GN-2

CONCRETE, FOUNDATIONS, AND REINFORCING STEEL:

1. ALL CONCRETE WORK SHALL BE IN ACCORDANCE WITH THE ACI 301, ACI 318, ACI 336, ASTM A184, ASTM A185 AND THE DESIGN AND CONSTRUCTION SPECIFICATION FOR CAST–IN–PLACE CONCRETE.

2. UNLESS NOTED OTHERWISE, SOIL BEARING PRESSURE USED FOR DESIGN OF SLABS AND FOUNDATIONS IS ASSUMED TO BE 1000 psf.

3. ALL CONCRETE SHALL HAVE A MINIMUM COMPRESSIVE STRENGTH (f'c) OF 3000 psi AT 28 DAYS, UNLESS NOTED OTHERWISE. NO MORE THAN 90 MINUTES SHALL ELAPSE FROM BATCH TIME TO TIME OF PLACEMENT UNLESS APPROVED BY THE ENGINEER OF RECORD. TEMPERATURE OF CONCRETE SHALL NOT EXCEED 90°f AT TIME OF PLACEMENT.

4. CONCRETE EXPOSED TO FREEZE–THAW CYCLES SHALL CONTAIN AIR ENTRAINING ADMIXTURES. AMOUNT OF AIR ENTRAINMENT TO BE BASED ON SIZE OF AGGREGATE AND F3 CLASS EXPOSURE (VERY SEVERE). CEMENT USED TO BE TYPE II PORTLAND CEMENT WITH A MAXIMUM WATER–TO–CEMENT RATIO (W/C) OF 0.45.

5. ALL STEEL REINFORCING SHALL CONFORM TO ASTM A615. ALL WELDED WIRE FABRIC (WWF) SHALL CONFORM TO ASTM A185. ALL SPLICES SHALL BE CLASS "B" TENSION SPLICES, UNLESS NOTED OTHERWISE. ALL HOOKS SHALL BE STANDARD 90 DEGREE HOOKS, UNLESS NOTED OTHERWISE. YIELD STRENGTH (Fy) OF STANDARD DEFORMED BARS ARE AS FOLLOWS:

#4 BARS AND SMALLER 40 ksi

#5 BARS AND LARGER 60 ksi

6. THE FOLLOWING MINIMUM CONCRETE COVER SHALL BE PROVIDED FOR REINFORCING STEEL UNLESS SHOWN OTHERWISE ON DRAWINGS:

- CONCRETE CAST AGAINST AND PERMANENTLY EXPOSED TO EARTH 3"
- CONCRETE EXPOSED TO EARTH OR WEATHER:
- #6 BARS AND LARGER 2"
- #5 BARS AND SMALLER 1–1/2"
- CONCRETE NOT EXPOSED TO EARTH OR WEATHER:
- SLAB AND WALLS 3/4"
- BEAMS AND COLUMNS 1–1/2"

7. A TOOLED EDGE OR A 3/4" CHAMFER SHALL BE PROVIDED AT ALL EXPOSED EDGES OF CONCRETE, UNLESS NOTED OTHERWISE, IN ACCORDANCE WITH ACI 301 SECTION 4.2.4.

ELECTRICAL INSTALLATION NOTES:

1. ALL ELECTRICAL WORK SHALL BE PERFORMED IN ACCORDANCE WITH THE PROJECT SPECIFICATIONS, NEC AND ALL APPLICABLE FEDERAL, STATE, AND LOCAL CODES/ORDINANCES.

2. CONDUIT ROUTINGS ARE SCHEMATIC. CONTRACTOR SHALL INSTALL CONDUITS SO THAT ACCESS TO EQUIPMENT IS NOT BLOCKED AND TRIP HAZARDS ARE ELIMINATED.

3. WIRING, RACEWAY AND SUPPORT METHODS AND MATERIALS SHALL COMPLY WITH THE REQUIREMENTS OF THE NEC.

4. ALL CIRCUITS SHALL BE SEGREGATED AND MAINTAIN MINIMUM CABLE SEPARATION AS REQUIRED BY THE NEC.

4.1. ALL EQUIPMENT SHALL BEAR THE UNDERWRITERS LABORATORIES LABEL OF APPROVAL, AND SHALL CONFORM TO REQUIREMENT OF THE NATIONAL ELECTRICAL CODE.

4.2. ALL OVERCURRENT DEVICES SHALL HAVE AN INTERRUPTING CURRENT RATING THAT SHALL BE GREATER THAN THE SHORT CIRCUIT CURRENT TO WHICH THEY ARE SUBJECTED, 22,000 AIC MINIMUM. VERIFY AVAILABLE SHORT CIRCUIT CURRENT DOES NOT EXCEED THE RATING OF ELECTRICAL EQUIPMENT IN ACCORDANCE WITH ARTICLE 110.24 NEC OR THE MOST CURRENT ADOPTED CODE PRE THE GOVERNING JURISDICTION.

5. EACH END OF EVERY POWER PHASE CONDUCTOR, GROUNDING CONDUCTOR, AND TELCO CONDUCTOR OR CABLE SHALL BE LABELED WITH COLOR–CODED INSULATION OR ELECTRICAL TAPE (3M BRAND, 1/2" PLASTIC ELECTRICAL TAPE WITH UV PROTECTION, OR EQUAL). THE IDENTIFICATION METHOD SHALL CONFORM WITH NEC AND OSHA.

6. ALL ELECTRICAL COMPONENTS SHALL BE CLEARLY LABELED WITH LAMICOID TAGS SHOWING THEIR RATED VOLTAGE, PHASE CONFIGURATION, WIRE CONFIGURATION, POWER OR AMPACITY RATING AND BRANCH CIRCUIT ID NUMBERS (i.e. PANEL BOARD AND CIRCUIT ID'S).

7. PANEL BOARDS (ID NUMBERS) SHALL BE CLEARLY LABELED WITH PLASTIC LABELS.

8. TIE WRAPS ARE NOT ALLOWED.

9. ALL POWER AND EQUIPMENT GROUND WIRING IN TUBING OR CONDUIT SHALL BE SINGLE COPPER CONDUCTOR (#14 OR LARGER) WITH TYPE THHW, THWN, THWN–2, XHHW, XHHW–2, THW, THW–2, RHW, OR RHW–2 INSULATION UNLESS OTHERWISE SPECIFIED.

10. SUPPLEMENTAL EQUIPMENT GROUND WIRING LOCATED INDOORS SHALL BE SINGLE COPPER CONDUCTOR (#6 OR LARGER) WITH TYPE THHW, THWN, THWN–2, XHHW, XHHW–2, THW, THW–2, RHW, OR RHW–2 INSULATION UNLESS OTHERWISE SPECIFIED.

11. POWER AND CONTROL WIRING IN FLEXIBLE CORD SHALL BE MULTI–CONDUCTOR, TYPE SOOW CORD (#14 OR LARGER) UNLESS OTHERWISE SPECIFIED.

12. POWER AND CONTROL WIRING FOR USE IN CABLE TRAY SHALL BE MULTI–CONDUCTOR, TYPE TC CABLE (#14 OR LARGER), WITH TYPE THHW, THWN, THWN–2, XHHW, XHHW–2, THW, THW–2, RHW, OR RHW–2 INSULATION UNLESS OTHERWISE SPECIFIED.

13. ALL POWER AND GROUNDING CONNECTIONS SHALL BE CRIMP–STYLE, COMPRESSION WIRE LUGS AND WIRE NUTS BY THOMAS AND BETTS (OR EQUAL). LUGS AND WIRE NUTS SHALL BE RATED FOR OPERATION NOT LESS THAN 75° C (90° C IF AVAILABLE).

14. RACEWAY AND CABLE TRAY SHALL BE LISTED OR LABELED FOR ELECTRICAL USE IN ACCORDANCE WITH NEMA, UL, ANSI/IEEE AND NEC.

15. ELECTRICAL METALLIC TUBING (EMT), INTERMEDIATE METAL CONDUIT (IMC), OR RIGID METAL CONDUIT (RMC) SHALL BE USED FOR EXPOSED INDOOR LOCATIONS.

16. ELECTRICAL METALLIC TUBING (EMT) OR METAL–CLAD CABLE (MC) SHALL BE USED FOR CONCEALED INDOOR LOCATIONS.

17. SCHEDULE 40 PVC UNDERGROUND ON STRAIGHTS AND SCHEDULE 80 PVC FOR ALL ELBOWS/90s AND ALL APPROVED ABOVE GRADE PVC CONDUIT.

18. LIQUID–TIGHT FLEXIBLE METALLIC CONDUIT (LIQUID–TITE FLEX) SHALL BE USED INDOORS AND OUTDOORS, WHERE VIBRATION OCCURS OR FLEXIBILITY IS NEEDED.

19. CONDUIT AND TUBING FITTINGS SHALL BE THREADED OR COMPRESSION–TYPE AND APPROVED FOR THE LOCATION USED. SET SCREW FITTINGS ARE NOT ACCEPTABLE.

20. CABINETS, BOXES AND WIRE WAYS SHALL BE LABELED FOR ELECTRICAL USE IN ACCORDANCE WITH NEMA, UL, ANSI/IEEE AND THE NEC.

21. WIREWAYS SHALL BE METAL WITH AN ENAMEL FINISH AND INCLUDE A HINGED COVER, DESIGNED TO SWING OPEN DOWNWARDS (WIREMOLD SPECMATE WIREWAY).

22. SLOTTED WIRING DUCT SHALL BE PVC AND INCLUDE COVER (PANDUIT TYPE E OR EQUAL).

23. CONDUITS SHALL BE FASTENED SECURELY IN PLACE WITH APPROVED NON–PERFORATED STRAPS AND HANGERS. EXPLOSIVE DEVICES (i.e. POWDER–ACTUATED) FOR ATTACHING HANGERS TO STRUCTURE WILL NOT BE PERMITTED. CLOSELY FOLLOW THE LINES OF THE STRUCTURE, MAINTAIN CLOSE PROXIMITY TO THE STRUCTURE AND KEEP CONDUITS IN TIGHT ENVELOPES. CHANGES IN DIRECTION TO ROUTE AROUND OBSTACLES SHALL BE MADE WITH CONDUIT OUTLET BODIES. CONDUIT SHALL BE INSTALLED IN A NEAT AND WORKMANLIKE MANNER. PARALLEL AND PERPENDICULAR TO STRUCTURE WALL AND CEILING LINES. ALL CONDUIT SHALL BE FISHED TO CLEAR OBSTRUCTIONS. ENDS OF CONDUITS SHALL BE TEMPORARILY CAPPED FLUSH TO FINISH GRADE TO PREVENT CONCRETE, PLASTER OR DIRT FROM ENTERING. CONDUITS SHALL BE RIGIDLY CLAMPED TO BOXES BY GALVANIZED MALLEABLE IRON BUSHING ON INSIDE AND GALVANIZED MALLEABLE IRON LOCKNUT ON OUTSIDE AND INSIDE.

24. EQUIPMENT CABINETS, TERMINAL BOXES, JUNCTION BOXES AND PULL BOXES SHALL BE GALVANIZED OR EPOXY–COATED SHEET STEEL. SHALL MEET OR EXCEED UL 50 AND BE RATED NEMA 1 (OR BETTER) FOR INTERIOR LOCATIONS AND NEMA 3 (OR BETTER) FOR EXTERIOR LOCATIONS.

25. METAL RECEPTACLE, SWITCH AND DEVICE BOXES SHALL BE GALVANIZED, EPOXY–COATED OR NON–CORRODING; SHALL MEET OR EXCEED UL 514A AND NEMA OS 1 AND BE RATED NEMA 1 (OR BETTER) FOR INTERIOR LOCATIONS AND WEATHER PROTECTED (WP OR BETTER) FOR EXTERIOR LOCATIONS.

26. NONMETALLIC RECEPTACLE, SWITCH AND DEVICE BOXES SHALL MEET OR EXCEED NEMA OS 2 (NEWEST REVISION) AND BE RATED NEMA 1 (OR BETTER) FOR INTERIOR LOCATIONS AND WEATHER PROTECTED (WP OR BETTER) FOR EXTERIOR LOCATIONS.

27. THE CONTRACTOR SHALL NOTIFY AND OBTAIN NECESSARY AUTHORIZATION FROM THE CARRIER AND/OR DISH WIRELESS AND TOWER OWNER BEFORE COMMENCING WORK ON THE AC POWER DISTRIBUTION PANELS.

28. THE CONTRACTOR SHALL PROVIDE NECESSARY TAGGING ON THE BREAKERS, CABLES AND DISTRIBUTION PANELS IN ACCORDANCE WITH THE APPLICABLE CODES AND STANDARDS TO SAFEGUARD LIFE AND PROPERTY.

29. INSTALL LAMICOID LABEL ON THE METER CENTER TO SHOW "DISH WIRELESS".

30. ALL EMPTY/SPARE CONDUITS THAT ARE INSTALLED ARE TO HAVE A METERED MULE TAPE PULL CORD INSTALLED.

dish WIRELESS
5701 SOUTH SANTA FE DRIVE
LITTLETON, CO 80120

BUTLER America Telecom LLC
1511 E. ORANGETHORPE AVE., SUITE D
FULLERTON, CA 92831

CDG
22431 ANTONIO PKWY
SUITE B160–131
RANCHO SANTA MARGARITA CA 92688
dconnell@connelldesigngroup.com
949–306–4644

REGISTERED PROFESSIONAL ENGINEER
DANIEL MICHAEL CONNELL
NO. 62543
EXP. 12/31/23
CIVIL
STATE OF CALIFORNIA

DATE STAMPED: 08/12/2022

IT IS A VIOLATION OF LAW FOR ANY PERSON, UNLESS THEY ARE ACTING UNDER THE DIRECTION OF A LICENSED PROFESSIONAL ENGINEER, TO ALTER THIS DOCUMENT.

DRAWN BY:	CHECKED BY:	APPROVED BY:
LE	JPC	DC

RFDS REV #1 DATED 04/05/2022

CONSTRUCTION DOCUMENTS

SUBMITTALS

REV	DATE	DESCRIPTION
A	07/25/2022	ISSUED FOR 90% CD REVIEW
0	08/11/2022	ISSUED FOR 90% CD REVIEW

(VENDOR) PROJECT NUMBER
SFSF001108B

DISH WIRELESS PROJECT NUMBER
SFSF001108B

761 NEESON RD.
MARINA, CA 93933
ROOFTOP

SHEET TITLE
GENERAL NOTES

SHEET NUMBER
GN-3

GROUNDING NOTES:

1. ALL GROUND ELECTRODE SYSTEMS (INCLUDING TELECOMMUNICATION, RADIO, LIGHTNING PROTECTION AND AC POWER GES'S) SHALL BE BONDED TOGETHER AT OR BELOW GRADE, BY TWO OR MORE COPPER BONDING CONDUCTORS IN ACCORDANCE WITH THE NEC.

2. THE CONTRACTOR SHALL PERFORM IEEE FALL-OF-POTENTIAL RESISTANCE TO EARTH TESTING (PER IEEE 1100 AND 81) FOR GROUND ELECTRODE SYSTEMS, THE CONTRACTOR SHALL FURNISH AND INSTALL SUPPLEMENTAL GROUND ELECTRODES AS NEEDED TO ACHIEVE A TEST RESULT OF 5 OHMS OR LESS.

3. THE CONTRACTOR IS RESPONSIBLE FOR PROPERLY SEQUENCING GROUNDING AND UNDERGROUND CONDUIT INSTALLATION AS TO PREVENT ANY LOSS OF CONTINUITY IN THE GROUNDING SYSTEM OR DAMAGE TO THE CONDUIT AND PROVIDE TESTING RESULTS.

4. METAL CONDUIT AND TRAY SHALL BE GROUNDED AND MADE ELECTRICALLY CONTINUOUS WITH LISTED BONDING FITTINGS OR BY BONDING ACROSS THE DISCONTINUITY WITH #6 COPPER WIRE UL APPROVED GROUNDING TYPE CONDUIT CLAMPS.

5. METAL RACEWAY SHALL NOT BE USED AS THE NEC REQUIRED EQUIPMENT GROUND CONDUCTOR. STRANDED COPPER CONDUCTORS WITH GREEN INSULATION, SIZED IN ACCORDANCE WITH THE NEC, SHALL BE FURNISHED AND INSTALLED WITH THE POWER CIRCUITS TO BTS EQUIPMENT.

6. EACH CABINET FRAME SHALL BE DIRECTLY CONNECTED TO THE MASTER GROUND BAR WITH GREEN INSULATED SUPPLEMENTAL EQUIPMENT GROUND WIRES, #6 STRANDED COPPER OR LARGER FOR INDOOR BTS; #2 BARE SOLID TINNED COPPER FOR OUTDOOR BTS.

7. CONNECTIONS TO THE GROUND BUS SHALL NOT BE DOUBLED UP OR STACKED BACK TO BACK CONNECTIONS ON OPPOSITE SIDE OF THE GROUND BUS ARE PERMITTED.

8. ALL EXTERIOR GROUND CONDUCTORS BETWEEN EQUIPMENT/GROUND BARS AND THE GROUND RING SHALL BE #2 SOLID TINNED COPPER UNLESS OTHERWISE INDICATED.

9. ALUMINUM CONDUCTOR OR COPPER CLAD STEEL CONDUCTOR SHALL NOT BE USED FOR GROUNDING CONNECTIONS.

10. USE OF 90° BENDS IN THE PROTECTION GROUNDING CONDUCTORS SHALL BE AVOIDED WHEN 45° BENDS CAN BE ADEQUATELY SUPPORTED.

11. EXOTHERMIC WELDS SHALL BE USED FOR ALL GROUNDING CONNECTIONS BELOW GRADE.

12. ALL GROUND CONNECTIONS ABOVE GRADE (INTERIOR AND EXTERIOR) SHALL BE FORMED USING HIGH PRESS CRIMPS.

13. COMPRESSION GROUND CONNECTIONS MAY BE REPLACED BY EXOTHERMIC WELD CONNECTIONS.

14. ICE BRIDGE BONDING CONDUCTORS SHALL BE EXOTHERMICALLY BONDED OR BOLTED TO THE BRIDGE AND THE TOWER GROUND BAR.

15. APPROVED ANTIOXIDANT COATINGS (i.e. CONDUCTIVE GEL OR PASTE) SHALL BE USED ON ALL COMPRESSION AND BOLTED GROUND CONNECTIONS.

16. ALL EXTERIOR GROUND CONNECTIONS SHALL BE COATED WITH A CORROSION RESISTANT MATERIAL.

17. MISCELLANEOUS ELECTRICAL AND NON-ELECTRICAL METAL BOXES, FRAMES AND SUPPORTS SHALL BE BONDED TO THE GROUND RING, IN ACCORDANCE WITH THE NEC.

18. BOND ALL METALLIC OBJECTS WITHIN 6 ft OF MAIN GROUND RING WITH (1) #2 BARE SOLID TINNED COPPER GROUND CONDUCTOR.

19. GROUND CONDUCTORS USED FOR THE FACILITY GROUNDING AND LIGHTNING PROTECTION SYSTEMS SHALL NOT BE ROUTED THROUGH METALLIC OBJECTS THAT FORM A RING AROUND THE CONDUCTOR, SUCH AS METALLIC CONDUITS, METAL SUPPORT CLIPS OR SLEEVES THROUGH WALLS OR FLOORS. WHEN IT IS REQUIRED TO BE HOUSED IN CONDUIT TO MEET CODE REQUIREMENTS OR LOCAL CONDITIONS, NON-METALLIC MATERIAL SUCH AS PVC CONDUIT SHALL BE USED. WHERE USE OF METAL CONDUIT IS UNAVOIDABLE (i.e., NONMETALLIC CONDUIT PROHIBITED BY LOCAL CODE) THE GROUND CONDUCTOR SHALL BE BONDED TO EACH END OF THE METAL CONDUIT.

20. ALL GROUNDS THAT TRANSITION FROM BELOW GRADE TO ABOVE GRADE MUST BE #2 BARE SOLID TINNED COPPER IN 3/4" NON-METALLIC, FLEXIBLE CONDUIT FROM 24" BELOW GRADE TO WITHIN 3" TO 6" OF CAD-WELD TERMINATION POINT. THE EXPOSED END OF THE CONDUIT MUST BE SEALED WITH SILICONE CAULK. (ADD TRANSITIONING GROUND STANDARD DETAIL AS WELL).

21. BUILDINGS WHERE THE MAIN GROUNDING CONDUCTORS ARE REQUIRED TO BE ROUTED TO GRADE, THE CONTRACTOR SHALL ROUTE TWO GROUNDING CONDUCTORS FROM THE ROOFTOP, TOWERS, AND WATER TOWERS GROUNDING RING, TO THE EXISTING GROUNDING SYSTEM, THE GROUNDING CONDUCTORS SHALL NOT BE SMALLER THAN 2/0 COPPER. ROOFTOP GROUNDING RING SHALL BE BONDED TO THE EXISTING GROUNDING SYSTEM, THE BUILDING STEEL COLUMNS, LIGHTNING PROTECTION SYSTEM, AND BUILDING MAIN WATER LINE (FERROUS OR NONFERROUS METAL PIPING ONLY). DO NOT ATTACH GROUNDING TO FIRE SPRINKLER SYSTEM PIPES.

dish WIRELESS
5701 SOUTH SANTA FE DRIVE
LITTLETON, CO 80120

BUTLER America Telecom LLC
1511 E. ORANGETHORPE AVE., SUITE D
FULLERTON, CA 92831

CDG
22431 ANTONIO PKWY
SUITE B160-131
RANCHO SANTA MARGARITA CA 92688
dconnell@connelldesigngroup.com
949-306-4644

REGISTERED PROFESSIONAL ENGINEER
DANIEL MICHAEL CONNELL
NO. 62543
EXP. 12/31/23
CIVIL
STATE OF CALIFORNIA

DATE STAMPED: 08/12/2022

IT IS A VIOLATION OF LAW FOR ANY PERSON, UNLESS THEY ARE ACTING UNDER THE DIRECTION OF A LICENSED PROFESSIONAL ENGINEER, TO ALTER THIS DOCUMENT.

DRAWN BY:	CHECKED BY:	APPROVED BY:
LE	JPC	DC

RFDS REV #1 DATED 04/05/2022

CONSTRUCTION DOCUMENTS

SUBMITTALS

REV	DATE	DESCRIPTION
A	07/25/2022	ISSUED FOR 90% CD REVIEW
0	08/11/2022	ISSUED FOR 90% CD REVIEW

(VENDOR) PROJECT NUMBER
SFSF001108B

DISH WIRELESS PROJECT NUMBER
SFSF001108B

761 NEESON RD.
MARINA, CA 93933
ROOFTOP

SHEET TITLE
GENERAL NOTES

SHEET NUMBER
GN-4

EXHIBIT C

Tenant shall procure and maintain for the duration of the Lease insurance against claims for injuries to persons or damages to property which may arise from or in connection with Tenant's operation and use of the leased Premises. The cost of such insurance shall be borne by Tenant.

MINIMUM SCOPE AND LIMIT OF INSURANCE

Coverage shall be at least as broad as:

1. **Commercial General Liability** (CGL): Coverage at least as broad as Insurance Services Office Form CG 00 01 covering CGL on an "occurrence" basis, including products and completed operations, property damage, bodily injury and personal & advertising injury with limits no less than **$2,000,000** per occurrence. If a general aggregate limit applies, either the general aggregate limit shall apply separately to this location (at least as broad as ISO CG 25 03 or 25 04) or the general aggregate limit shall be twice the required occurrence limit.

2. **Workers' Compensation** insurance as required by the State of California, with Statutory Limits, and Employer's Liability Insurance with limits of no less than **$1,000,000** per accident for bodily injury or disease. (This applies to Tenants with employees).

3. **Property insurance** against all risks of loss to any Tenant improvements or betterments, at full replacement cost with no coinsurance penalty provision.

If Tenant maintains broader coverage and/or higher limits than the minimums shown above, City requires and shall be entitled to the broader coverage and/or the higher limits maintained by Tenant.

Other Insurance Provisions

The insurance policies are to contain, or be endorsed to contain, the following provisions:

Additional Insured Status
City, its officers, officials, employees, and volunteers are to be covered as additional insureds on the CGL policy with respect to liability arising out of work or operations performed by or on behalf of Tenant including materials, parts, or equipment furnished in connection with such work or operations. General liability coverage can be provided in the form of an endorsement to Tenant's insurance (at least as broad as ISO Form CG 20 10 11 85 or if not available, through the addition of both CG 20 10, CG 20 26, CG 20 33, or CG 20 38; and CG 20 37 if a later edition is used).

Primary Coverage
For any claims related to this Lease, Tenant's insurance coverage shall be primary and non-contributory and at least as broad as ISO CG 20 01 04 13 as respects City, its officers, officials, employees, and volunteers. Any insurance or self-insurance maintained by City, its officers, officials, employees, or volunteers shall be excess of Tenant's insurance and shall not contribute with it. This requirement shall also apply to any Excess or Umbrella liability policies.

Umbrella or Excess Policy
Tenant may use Umbrella or Excess Policies to provide the liability limits as required in this Lease. This form of insurance will be acceptable provided that all of the Primary and Umbrella or Excess Policies shall provide all of the insurance coverages herein required, including, but not limited to, primary and non-contributory, additional insured, indemnity, and defense requirements. The Umbrella or Excess policies shall be provided on a true "following form" or broader coverage basis, with coverage at least as broad as provided on the underlying Commercial General Liability insurance. No insurance policies maintained by the Additional Insureds, whether primary or excess, and which also apply to a loss covered hereunder, shall be called upon to contribute to a loss until Tenant's primary and excess liability policies are exhausted.

Legal Liability Coverage
The property insurance to be endorsed to include Legal Liability Coverage (ISO Form CP 00 40 04 02 or equivalent) with a limit equal to the replacement cost of the leased property.

Notice of Cancellation
Each insurance policy required above shall provide thirty (30) days' notice of cancellation or change in coverage to the City

Waiver of Subrogation
Tenant hereby grants to City a waiver of any right to subrogation which any insurer of said Tenant may acquire against City by virtue of the payment of any loss under such insurance. Tenant agrees to obtain any endorsement that may be necessary to affect this waiver of subrogation, but this provision applies regardless of whether or not City has received a waiver of subrogation endorsement from the insurer.

Self-Insured Retentions
Self-insured retentions must be declared to and approved by City. City may require the Tenant to purchase coverage with a lower retention or provide proof of ability to pay losses and related investigations, claim administration, and defense expenses within the retention. The policy language shall provide, or be endorsed to provide, that the self-insured retention may be satisfied by either the named insured or City. The CGL and any policies, including Excess liability policies, may not be subject to a self-insured retention (SIR) or deductible that exceeds $25,000 unless approved in writing by City. Any and all deductibles and SIRs shall be the sole responsibility of Tenant who procured such insurance and shall not apply to the Indemnified Additional Insured Parties. City may deduct from any amounts otherwise due Tenant to fund the SIR/deductible. Policies shall NOT contain any self-insured retention (SIR) provision that limits the satisfaction of the SIR to the Named. The policy must also provide that Defense costs, including the Allocated Loss Adjustment Expenses, will satisfy the SIR or deductible. City reserves the right to obtain a copy of any policies and endorsements for verification.

Acceptability of Insurers
Insurance is to be placed with insurers authorized to conduct business in the state with a current A.M. Best's rating of no less than A:VII, unless otherwise acceptable to City.

Verification of Coverage
Tenant shall furnish City with original certificates and amendatory endorsements or copies of the applicable policy language effecting coverage required by this clause and a copy of the Declarations and Endorsements Pages of the CGL and any Excess policies listing all policy endorsements. All

certificates and endorsements and copies of the Declarations & Endorsements pages are to be received and approved by City before work commences. However, failure to obtain the required documents prior to the work beginning shall not waive Tenant's obligation to provide them. City reserves the right to require complete, certified copies of all required insurance policies, including endorsements required by these specifications, at any time. City reserves the right to modify these requirements, including limits, based on the nature of the risk, prior experience, insurer, coverage, or other special circumstances.

Special Risks or Circumstances

City reserves the right to modify these requirements, including limits, based on the nature of the risk, prior experience, insurer, coverage, or other special circumstances.

A notary public or other officer completing this certificate verifies only the identity of the individual who signed the document to which this certificate is attached, and not the truthfulness, accuracy, or validity of that document.

STATE OF _____
COUNTY OF _____

On _____, before me _____,
Notary Public, personally appeared _____
who proved to me on the basis of satisfactory evidence to be the person(s) whose name(s) is/are subscribed to the within instrument and acknowledged to me that he/she/they executed the same in his/her/their authorized capacity(ies), and that by his/her/their signature(s) on the instrument the person(s), or the entity upon behalf of which the person(s) acted, executed the instrument.

I certify under PENALTY OF PERJURY under the laws of the State of California that the foregoing paragraph is true and correct.

WITNESS my hand and official seal.

_____ (Seal)
Notary Public

A notary public or other officer completing this certificate verifies only the identity of the individual who signed the document to which this certificate is attached, and not the truthfulness, accuracy, or validity of that document.

STATE OF _____
COUNTY OF _____

On _____, before me _____,
Notary Public, personally appeared _____
who proved to me on the basis of satisfactory evidence to be the person(s) whose name(s) is/are subscribed to the within instrument and acknowledged to me that he/she/they executed the same in his/her/their authorized capacity(ies), and that by his/her/their signature(s) on the instrument the person(s), or the entity upon behalf of which the person(s) acted, executed the instrument.

I certify under PENALTY OF PERJURY under the laws of the State of California that the foregoing paragraph is true and correct.

WITNESS my hand and official seal.

_____ (Seal)
Notary Public

FAA
Airports

ASSURANCES

AIRPORT SPONSORS

A. General.

1. These assurances shall be complied with in the performance of grant agreements for airport development, airport planning, and noise compatibility program grants for airport sponsors.
2. These assurances are required to be submitted as part of the project application by sponsors requesting funds under the provisions of Title 49, U.S.C., subtitle VII, as amended. As used herein, the term "public agency sponsor" means a public agency with control of a public-use airport; the term "private sponsor" means a private owner of a public-use airport; and the term "sponsor" includes both public agency sponsors and private sponsors.
3. Upon acceptance of this grant offer by the sponsor, these assurances are incorporated in and become part of this grant agreement.

B. Duration and Applicability.

1. **Airport development or Noise Compatibility Program Projects Undertaken by a Public Agency Sponsor.**

   The terms, conditions and assurances of this grant agreement shall remain in full force and effect throughout the useful life of the facilities developed or equipment acquired for an airport development or noise compatibility program project, or throughout the useful life of the project items installed within a facility under a noise compatibility program project, but in any event not to exceed twenty (20) years from the date of acceptance of a grant offer of Federal funds for the project. However, there shall be no limit on the duration of the assurances regarding Exclusive Rights and Airport Revenue so long as the airport is used as an airport. There shall be no limit on the duration of the terms, conditions, and assurances with respect to real property acquired with federal funds. Furthermore, the duration of the Civil Rights assurance shall be specified in the assurances.

2. **Airport Development or Noise Compatibility Projects Undertaken by a Private Sponsor.**

   The preceding paragraph 1 also applies to a private sponsor except that the useful life of project items installed within a facility or the useful life of the facilities developed or equipment acquired under an airport development or noise compatibility program project shall be no less than ten (10) years from the date of acceptance of Federal aid for the project.

3. **Airport Planning Undertaken by a Sponsor.**

   Unless otherwise specified in this grant agreement, only Assurances 1, 2, 3, 5, 6, 13, 18, 25, 30, 32, 33, and 34 in Section C apply to planning projects. The terms, conditions, and assurances of this grant agreement shall remain in full force and effect during the life of the project; there shall be no limit on the duration of the assurances regarding Exclusive Rights and Airport Revenue so long as the airport is used as an airport.

C. Sponsor Certification.

The sponsor hereby assures and certifies, with respect to this grant that:

1. **General Federal Requirements.**

It will comply with all applicable Federal laws, regulations, executive orders, policies, guidelines, and requirements as they relate to the application, acceptance and use of Federal funds for this project including but not limited to the following:

a. Title 49, U.S.C., subtitle VII, as amended.

b. Davis-Bacon Act - 40 U.S.C. 276(a), et seq.[1]

c. Federal Fair Labor Standards Act - 29 U.S.C. 201, et seq.

d. Hatch Act – 5 U.S.C. 1501, et seq.[2]

e. Uniform Relocation Assistance and Real Property Acquisition Policies Act of 1970 Title 42 U.S.C. 4601, et seq.[1 2]

f. National Historic Preservation Act of 1966 - Section 106 - 16 U.S.C. 470(f).[1]

g. Archeological and Historic Preservation Act of 1974 - 16 U.S.C. 469 through 469c.[1]

h. Native Americans Grave Repatriation Act - 25 U.S.C. Section 3001, et seq.

i. Clean Air Act, P.L. 90-148, as amended.

j. Coastal Zone Management Act, P.L. 93-205, as amended.

k. Flood Disaster Protection Act of 1973 - Section 102(a) - 42 U.S.C. 4012a.[1]

l. Title 49, U.S.C., Section 303, (formerly known as Section 4(f))

m. Rehabilitation Act of 1973 - 29 U.S.C. 794.

n. Title VI of the Civil Rights Act of 1964 (42 U.S.C. § 2000d et seq., 78 stat. 252) (prohibits discrimination on the basis of race, color, national origin);

o. Americans with Disabilities Act of 1990, as amended, (42 U.S.C. § 12101 et seq.), prohibits discrimination on the basis of disability).

p. Age Discrimination Act of 1975 - 42 U.S.C. 6101, et seq.

q. American Indian Religious Freedom Act, P.L. 95-341, as amended.

r. Architectural Barriers Act of 1968 -42 U.S.C. 4151, et seq.[1]

s. Power plant and Industrial Fuel Use Act of 1978 - Section 403- 2 U.S.C. 8373.[1]

t. Contract Work Hours and Safety Standards Act - 40 U.S.C. 327, et seq.[1]

u. Copeland Anti-kickback Act - 18 U.S.C. 874.1

v. National Environmental Policy Act of 1969 - 42 U.S.C. 4321, et seq.[1]

w. Wild and Scenic Rivers Act, P.L. 90-542, as amended.

x. Single Audit Act of 1984 - 31 U.S.C. 7501, et seq.[2]

y. Drug-Free Workplace Act of 1988 - 41 U.S.C. 702 through 706.

z. The Federal Funding Accountability and Transparency Act of 2006, as amended (Pub. L. 109-282, as amended by section 6202 of Pub. L. 110-252).

EXECUTIVE ORDERS

a. Executive Order 11246 - Equal Employment Opportunity[1]

b. Executive Order 11990 - Protection of Wetlands

c. Executive Order 11998 –Flood Plain Management

d. Executive Order 12372 - Intergovernmental Review of Federal Programs

e. Executive Order 12699 - Seismic Safety of Federal and Federally Assisted New Building Construction[1]

f. Executive Order 12898 - Environmental Justice

g. Executive Order 13788 - Buy American and Hire American

h. Executive Order 13858 – Strengthening Buy-American Preferences for Infrastructure Projects

FEDERAL REGULATIONS

a. 2 CFR Part180 – OMB Guidelines to Agencies on Government-wide Debarment and Suspension (Non-procurement).

b. 2 CFR Part 200, Uniform Administrative Requirements, Cost Principles, and Audit Requirements for Federal Awards. [OMB Circular A-87 Cost Principles Applicable to Grants and Contracts with State and Local Governments, and OMB Circular A-133 - Audits of States, Local Governments, and Non-Profit Organizations].[4, 5, 6]

c. 2 CFR Part 1200 – Non-procurement Suspension and Debarment

d. 14 CFR Part 13 - Investigative and Enforcement Procedures14 CFR Part 16 - Rules of Practice For Federally Assisted Airport Enforcement Proceedings.

e. 14 CFR Part 150 - Airport noise compatibility planning.

f. 28 CFR Part 35- Discrimination on the Basis of Disability in State and Local Government Services.

g. 28 CFR § 50.3 - U.S. Department of Justice Guidelines for Enforcement of Title VI of the Civil Rights Act of 1964.

h. 29 CFR Part 1 - Procedures for predetermination of wage rates.[1]

i. 29 CFR Part 3 - Contractors and subcontractors on public building or public work financed in whole or part by loans or grants from the United States.[1]

j. 29 CFR Part 5 - Labor standards provisions applicable to contracts covering federally financed and assisted construction (also labor standards provisions applicable to non-construction contracts subject to the Contract Work Hours and Safety Standards Act).[1]

k. 41 CFR Part 60 - Office of Federal Contract Compliance Programs, Equal Employment Opportunity, Department of Labor (Federal and federally assisted contracting requirements).[1]

l. 49 CFR Part 18 - Uniform administrative requirements for grants and cooperative agreements to state and local governments.[3]

m. 49 CFR Part 20 - New restrictions on lobbying.

n. 49 CFR Part 21 – Nondiscrimination in federally-assisted programs of the Department of Transportation - effectuation of Title VI of the Civil Rights Act of 1964.

o. 49 CFR Part 23 - Participation by Disadvantage Business Enterprise in Airport Concessions.

p. 49 CFR Part 24 – Uniform Relocation Assistance and Real Property Acquisition for Federal and Federally Assisted Programs.[1 2]

q. 49 CFR Part 26 – Participation by Disadvantaged Business Enterprises in Department of Transportation Programs.

r. 49 CFR Part 27 – Nondiscrimination on the Basis of Handicap in Programs and Activities Receiving or Benefiting from Federal Financial Assistance.[1]

s. 49 CFR Part 28 –Enforcement of Nondiscrimination on the Basis of Handicap in Programs or Activities conducted by the Department of Transportation.

t. 49 CFR Part 30 - Denial of public works contracts to suppliers of goods and services of countries that deny procurement market access to U.S. contractors.

u. 49 CFR Part 32 –Government-wide Requirements for Drug-Free Workplace (Financial Assistance)

v. 49 CFR Part 37 –Transportation Services for Individuals with Disabilities (ADA).

w. 49 CFR Part 41 - Seismic safety of Federal and federally assisted or regulated new building construction.

SPECIFIC ASSURANCES

Specific assurances required to be included in grant agreements by any of the above laws, regulations or circulars are incorporated by reference in this grant agreement.

FOOTNOTES TO ASSURANCE C.1.

[1] These laws do not apply to airport planning sponsors.

[2] These laws do not apply to private sponsors.

[3] 49 CFR Part 18 and 2 CFR Part 200 contain requirements for State and Local Governments receiving Federal assistance. Any requirement levied upon State and Local Governments by this regulation and circular shall also be applicable to private sponsors receiving Federal assistance under Title 49, United States Code.

[4] On December 26, 2013 at 78 FR 78590, the Office of Management and Budget (OMB) issued the Uniform Administrative Requirements, Cost Principles, and Audit Requirements for Federal Awards in 2 CFR Part 200. 2 CFR Part 200 replaces and combines the former Uniform Administrative Requirements for Grants (OMB Circular A-102 and Circular A-110 or 2 CFR Part 215 or Circular) as well as the Cost Principles (Circulars A-21 or 2 CFR part 220; Circular A-87 or 2 CFR part 225; and A-122, 2 CFR part 230). Additionally it replaces Circular A-133 guidance on the Single Annual Audit. In accordance with 2 CFR section 200.110, the standards set forth in Part 200 which affect administration of Federal awards issued by Federal agencies become effective once implemented by Federal agencies or when any future amendment to this Part becomes final. Federal agencies, including the Department of Transportation, must implement the policies and procedures applicable to Federal awards by promulgating a regulation to be effective by December 26, 2014 unless different provisions are required by statute or approved by OMB.

[5] Cost principles established in 2 CFR part 200 subpart E must be used as guidelines for determining the eligibility of specific types of expenses.

[6] Audit requirements established in 2 CFR part 200 subpart F are the guidelines for audits.

2. **Responsibility and Authority of the Sponsor.**

   a. Public Agency Sponsor:

      It has legal authority to apply for this grant, and to finance and carry out the proposed project; that a resolution, motion or similar action has been duly adopted or passed as an official act of the applicant's governing body authorizing the filing of the application, including all understandings and assurances contained therein, and directing and authorizing the person identified as the official representative of the applicant to act in connection with the application and to provide such additional information as may be required.

   b. Private Sponsor:

      It has legal authority to apply for this grant and to finance and carry out the proposed project and comply with all terms, conditions, and assurances of this grant agreement. It shall designate an official representative and shall in writing direct and authorize that person to file this application, including all understandings and assurances contained therein; to act in connection with this application; and to provide such additional information as may be required.

3. **Sponsor Fund Availability.**

   It has sufficient funds available for that portion of the project costs which are not to be paid by the United States. It has sufficient funds available to assure operation and maintenance of items funded under this grant agreement which it will own or control.

4. **Good Title.**

   a. It, a public agency or the Federal government, holds good title, satisfactory to the Secretary, to the landing area of the airport or site thereof, or will give assurance satisfactory to the Secretary that good title will be acquired.

   b. For noise compatibility program projects to be carried out on the property of the sponsor, it holds good title satisfactory to the Secretary to that portion of the property upon which Federal funds will be expended or will give assurance to the Secretary that good title will be obtained.

5. **Preserving Rights and Powers.**

   a. It will not take or permit any action which would operate to deprive it of any of the rights and powers necessary to perform any or all of the terms, conditions, and assurances in this grant agreement without the written approval of the Secretary, and will act promptly to acquire, extinguish or modify any outstanding rights or claims of right of others which would interfere with such performance by the sponsor. This shall be done in a manner acceptable to the Secretary.

   b. Subject to the FAA Act of 2018, Public Law 115-254, Section 163, it will not sell, lease, encumber, or otherwise transfer or dispose of any part of its title or other interests in the property shown on Exhibit A to this application or, for a noise compatibility program project, that portion of the property upon which Federal funds have been expended, for the duration of the terms, conditions, and assurances in this grant agreement without approval by the

Secretary. If the transferee is found by the Secretary to be eligible under Title 49, United States Code, to assume the obligations of this grant agreement and to have the power, authority, and financial resources to carry out all such obligations, the sponsor shall insert in the contract or document transferring or disposing of the sponsor's interest, and make binding upon the transferee all of the terms, conditions, and assurances contained in this grant agreement.

c. For all noise compatibility program projects which are to be carried out by another unit of local government or are on property owned by a unit of local government other than the sponsor, it will enter into an agreement with that government. Except as otherwise specified by the Secretary, that agreement shall obligate that government to the same terms, conditions, and assurances that would be applicable to it if it applied directly to the FAA for a grant to undertake the noise compatibility program project. That agreement and changes thereto must be satisfactory to the Secretary. It will take steps to enforce this agreement against the local government if there is substantial non-compliance with the terms of the agreement.

d. For noise compatibility program projects to be carried out on privately owned property, it will enter into an agreement with the owner of that property which includes provisions specified by the Secretary. It will take steps to enforce this agreement against the property owner whenever there is substantial non-compliance with the terms of the agreement.

e. If the sponsor is a private sponsor, it will take steps satisfactory to the Secretary to ensure that the airport will continue to function as a public-use airport in accordance with these assurances for the duration of these assurances.

f. If an arrangement is made for management and operation of the airport by any agency or person other than the sponsor or an employee of the sponsor, the sponsor will reserve sufficient rights and authority to insure that the airport will be operated and maintained in accordance Title 49, United States Code, the regulations and the terms, conditions and assurances in this grant agreement and shall insure that such arrangement also requires compliance therewith.

g. Sponsors of commercial service airports will not permit or enter into any arrangement that results in permission for the owner or tenant of a property used as a residence, or zoned for residential use, to taxi an aircraft between that property and any location on airport. Sponsors of general aviation airports entering into any arrangement that results in permission for the owner of residential real property adjacent to or near the airport must comply with the requirements of Sec. 136 of Public Law 112-95 and the sponsor assurances.

6. **Consistency with Local Plans.**

   The project is reasonably consistent with plans (existing at the time of submission of this application) of public agencies that are authorized by the State in which the project is located to plan for the development of the area surrounding the airport.

7. **Consideration of Local Interest.**

   It has given fair consideration to the interest of communities in or near where the project may be located.

8. **Consultation with Users.**

   In making a decision to undertake any airport development project under Title 49, United States Code, it has undertaken reasonable consultations with affected parties using the airport at which project is proposed.

9. **Public Hearings.**

   In projects involving the location of an airport, an airport runway, or a major runway extension, it has afforded the opportunity for public hearings for the purpose of considering the economic, social, and environmental effects of the airport or runway location and its consistency with goals and objectives of such planning as has been carried out by the community and it shall, when requested by the Secretary, submit a copy of the transcript of such hearings to the Secretary. Further, for such projects, it has on its management board either voting representation from the communities where the project is located or has advised the communities that they have the right to petition the Secretary concerning a proposed project.

10. **Metropolitan Planning Organization.**

    In projects involving the location of an airport, an airport runway, or a major runway extension at a medium or large hub airport, the sponsor has made available to and has provided upon request to the metropolitan planning organization in the area in which the airport is located, if any, a copy of the proposed amendment to the airport layout plan to depict the project and a copy of any airport master plan in which the project is described or depicted.

11. **Pavement Preventive Maintenance.**

    With respect to a project approved after January 1, 1995, for the replacement or reconstruction of pavement at the airport, it assures or certifies that it has implemented an effective airport pavement maintenance-management program and it assures that it will use such program for the useful life of any pavement constructed, reconstructed or repaired with Federal financial assistance at the airport. It will provide such reports on pavement condition and pavement management programs as the Secretary determines may be useful.

12. **Terminal Development Prerequisites.**

    For projects which include terminal development at a public use airport, as defined in Title 49, it has, on the date of submittal of the project grant application, all the safety equipment required for certification of such airport under section 44706 of Title 49, United States Code, and all the security equipment required by rule or regulation, and has provided for access to the passenger enplaning and deplaning area of such airport to passengers enplaning and deplaning from aircraft other than air carrier aircraft.

13. **Accounting System, Audit, and Record Keeping Requirements.**

    a. It shall keep all project accounts and records which fully disclose the amount and disposition by the recipient of the proceeds of this grant, the total cost of the project in connection with which this grant is given or used, and the amount or nature of that portion of the cost of the project supplied by other sources, and such other financial records pertinent to the project. The accounts and records shall be kept in accordance with an accounting system that will facilitate an effective audit in accordance with the Single Audit Act of 1984.

    b. It shall make available to the Secretary and the Comptroller General of the United States, or any of their duly authorized representatives, for the purpose of audit and examination, any books, documents, papers, and records of the recipient that are pertinent to this grant. The Secretary may require that an appropriate audit be conducted by a recipient. In any case in which an independent audit is made of the accounts of a sponsor relating to the disposition of the proceeds of a grant or relating to the project in connection with which this grant was given or used, it shall file a certified copy of such audit with the Comptroller General of the United States not later than six (6) months following the close of the fiscal year for which the audit was made.

14. **Minimum Wage Rates.**

    It shall include, in all contracts in excess of $2,000 for work on any projects funded under this grant agreement which involve labor, provisions establishing minimum rates of wages, to be predetermined by the Secretary of Labor, in accordance with the Davis-Bacon Act, as amended (40 U.S.C. 276a-276a-5), which contractors shall pay to skilled and unskilled labor, and such minimum rates shall be stated in the invitation for bids and shall be included in proposals or bids for the work.

15. **Veteran's Preference.**

    It shall include in all contracts for work on any project funded under this grant agreement which involve labor, such provisions as are necessary to insure that, in the employment of labor (except in executive, administrative, and supervisory positions), preference shall be given to Vietnam era veterans, Persian Gulf veterans, Afghanistan-Iraq war veterans, disabled veterans, and small business concerns owned and controlled by disabled veterans as defined in Section 47112 of Title 49, United States Code. However, this preference shall apply only where the individuals are available and qualified to perform the work to which the employment relates.

16. **Conformity to Plans and Specifications.**

    It will execute the project subject to plans, specifications, and schedules approved by the Secretary. Such plans, specifications, and schedules shall be submitted to the Secretary prior to commencement of site preparation, construction, or other performance under this grant agreement, and, upon approval of the Secretary, shall be incorporated into this grant agreement. Any modification to the approved plans, specifications, and schedules shall also be subject to approval of the Secretary, and incorporated into this grant agreement.

17. **Construction Inspection and Approval.**

    It will provide and maintain competent technical supervision at the construction site throughout the project to assure that the work conforms to the plans, specifications, and schedules approved by the Secretary for the project. It shall subject the construction work on any project contained in an approved project application to inspection and approval by the Secretary and such work shall be in accordance with regulations and procedures prescribed by the Secretary. Such regulations and procedures shall require such cost and progress reporting by the sponsor or sponsors of such project as the Secretary shall deem necessary.

18. **Planning Projects.**

    In carrying out planning projects:

    a. It will execute the project in accordance with the approved program narrative contained in the project application or with the modifications similarly approved.

    b. It will furnish the Secretary with such periodic reports as required pertaining to the planning project and planning work activities.

    c. It will include in all published material prepared in connection with the planning project a notice that the material was prepared under a grant provided by the United States.

    d. It will make such material available for examination by the public, and agrees that no material prepared with funds under this project shall be subject to copyright in the United States or any other country.

    e. It will give the Secretary unrestricted authority to publish, disclose, distribute, and otherwise use any of the material prepared in connection with this grant.

f. It will grant the Secretary the right to disapprove the sponsor's employment of specific consultants and their subcontractors to do all or any part of this project as well as the right to disapprove the proposed scope and cost of professional services.

g. It will grant the Secretary the right to disapprove the use of the sponsor's employees to do all or any part of the project.

h. It understands and agrees that the Secretary's approval of this project grant or the Secretary's approval of any planning material developed as part of this grant does not constitute or imply any assurance or commitment on the part of the Secretary to approve any pending or future application for a Federal airport grant.

19. **Operation and Maintenance.**

a. The airport and all facilities which are necessary to serve the aeronautical users of the airport, other than facilities owned or controlled by the United States, shall be operated at all times in a safe and serviceable condition and in accordance with the minimum standards as may be required or prescribed by applicable Federal, state and local agencies for maintenance and operation. It will not cause or permit any activity or action thereon which would interfere with its use for airport purposes. It will suitably operate and maintain the airport and all facilities thereon or connected therewith, with due regard to climatic and flood conditions. Any proposal to temporarily close the airport for non-aeronautical purposes must first be approved by the Secretary. In furtherance of this assurance, the sponsor will have in effect arrangements for-

1) Operating the airport's aeronautical facilities whenever required;

2) Promptly marking and lighting hazards resulting from airport conditions, including temporary conditions; and

3) Promptly notifying airmen of any condition affecting aeronautical use of the airport. Nothing contained herein shall be construed to require that the airport be operated for aeronautical use during temporary periods when snow, flood or other climatic conditions interfere with such operation and maintenance. Further, nothing herein shall be construed as requiring the maintenance, repair, restoration, or replacement of any structure or facility which is substantially damaged or destroyed due to an act of God or other condition or circumstance beyond the control of the sponsor.

b. It will suitably operate and maintain noise compatibility program items that it owns or controls upon which Federal funds have been expended.

20. **Hazard Removal and Mitigation.**

It will take appropriate action to assure that such terminal airspace as is required to protect instrument and visual operations to the airport (including established minimum flight altitudes) will be adequately cleared and protected by removing, lowering, relocating, marking, or lighting or otherwise mitigating existing airport hazards and by preventing the establishment or creation of future airport hazards.

21. **Compatible Land Use.**

It will take appropriate action, to the extent reasonable, including the adoption of zoning laws, to restrict the use of land adjacent to or in the immediate vicinity of the airport to activities and purposes compatible with normal airport operations, including landing and takeoff of aircraft. In addition, if the project is for noise compatibility program implementation, it will not cause or permit any change in land use, within its jurisdiction, that will reduce its compatibility, with

respect to the airport, of the noise compatibility program measures upon which Federal funds have been expended.

22. **Economic Nondiscrimination.**

a. It will make the airport available as an airport for public use on reasonable terms and without unjust discrimination to all types, kinds and classes of aeronautical activities, including commercial aeronautical activities offering services to the public at the airport.

b. In any agreement, contract, lease, or other arrangement under which a right or privilege at the airport is granted to any person, firm, or corporation to conduct or to engage in any aeronautical activity for furnishing services to the public at the airport, the sponsor will insert and enforce provisions requiring the contractor to-

1) furnish said services on a reasonable, and not unjustly discriminatory, basis to all users thereof, and

2) charge reasonable, and not unjustly discriminatory, prices for each unit or service, provided that the contractor may be allowed to make reasonable and nondiscriminatory discounts, rebates, or other similar types of price reductions to volume purchasers.

c. Each fixed-based operator at the airport shall be subject to the same rates, fees, rentals, and other charges as are uniformly applicable to all other fixed-based operators making the same or similar uses of such airport and utilizing the same or similar facilities.

d. Each air carrier using such airport shall have the right to service itself or to use any fixed-based operator that is authorized or permitted by the airport to serve any air carrier at such airport.

e. Each air carrier using such airport (whether as a tenant, non-tenant, or subtenant of another air carrier tenant) shall be subject to such nondiscriminatory and substantially comparable rules, regulations, conditions, rates, fees, rentals, and other charges with respect to facilities directly and substantially related to providing air transportation as are applicable to all such air carriers which make similar use of such airport and utilize similar facilities, subject to reasonable classifications such as tenants or non-tenants and signatory carriers and non-signatory carriers. Classification or status as tenant or signatory shall not be unreasonably withheld by any airport provided an air carrier assumes obligations substantially similar to those already imposed on air carriers in such classification or status.

f. It will not exercise or grant any right or privilege which operates to prevent any person, firm, or corporation operating aircraft on the airport from performing any services on its own aircraft with its own employees [including, but not limited to maintenance, repair, and fueling] that it may choose to perform.

g. In the event the sponsor itself exercises any of the rights and privileges referred to in this assurance, the services involved will be provided on the same conditions as would apply to the furnishing of such services by commercial aeronautical service providers authorized by the sponsor under these provisions.

h. The sponsor may establish such reasonable, and not unjustly discriminatory, conditions to be met by all users of the airport as may be necessary for the safe and efficient operation of the airport.

i. The sponsor may prohibit or limit any given type, kind or class of aeronautical use of the airport if such action is necessary for the safe operation of the airport or necessary to serve the civil aviation needs of the public.

23. **Exclusive Rights.**

It will permit no exclusive right for the use of the airport by any person providing, or intending to provide, aeronautical services to the public. For purposes of this paragraph, the providing of the services at an airport by a single fixed-based operator shall not be construed as an exclusive right if both of the following apply:

a. It would be unreasonably costly, burdensome, or impractical for more than one fixed-based operator to provide such services, and

b. If allowing more than one fixed-based operator to provide such services would require the reduction of space leased pursuant to an existing agreement between such single fixed-based operator and such airport. It further agrees that it will not, either directly or indirectly, grant or permit any person, firm, or corporation, the exclusive right at the airport to conduct any aeronautical activities, including, but not limited to charter flights, pilot training, aircraft rental and sightseeing, aerial photography, crop dusting, aerial advertising and surveying, air carrier operations, aircraft sales and services, sale of aviation petroleum products whether or not conducted in conjunction with other aeronautical activity, repair and maintenance of aircraft, sale of aircraft parts, and any other activities which because of their direct relationship to the operation of aircraft can be regarded as an aeronautical activity, and that it will terminate any exclusive right to conduct an aeronautical activity now existing at such an airport before the grant of any assistance under Title 49, United States Code.

24. **Fee and Rental Structure.**

It will maintain a fee and rental structure for the facilities and services at the airport which will make the airport as self-sustaining as possible under the circumstances existing at the particular airport, taking into account such factors as the volume of traffic and economy of collection. No part of the Federal share of an airport development, airport planning or noise compatibility project for which a grant is made under Title 49, United States Code, the Airport and Airway Improvement Act of 1982, the Federal Airport Act or the Airport and Airway Development Act of 1970 shall be included in the rate basis in establishing fees, rates, and charges for users of that airport.

25. **Airport Revenues.**

a. All revenues generated by the airport and any local taxes on aviation fuel established after December 30, 1987, will be expended by it for the capital or operating costs of the airport; the local airport system; or other local facilities which are owned or operated by the owner or operator of the airport and which are directly and substantially related to the actual air transportation of passengers or property; or for noise mitigation purposes on or off the airport. The following exceptions apply to this paragraph:

1) If covenants or assurances in debt obligations issued before September 3, 1982, by the owner or operator of the airport, or provisions enacted before September 3, 1982, in governing statutes controlling the owner or operator's financing, provide for the use of the revenues from any of the airport owner or operator's facilities, including the airport, to support not only the airport but also the airport owner or operator's general debt obligations or other facilities, then this limitation on the use of all revenues generated

by the airport (and, in the case of a public airport, local taxes on aviation fuel) shall not apply.

2) If the Secretary approves the sale of a privately owned airport to a public sponsor and provides funding for any portion of the public sponsor's acquisition of land, this limitation on the use of all revenues generated by the sale shall not apply to certain proceeds from the sale. This is conditioned on repayment to the Secretary by the private owner of an amount equal to the remaining unamortized portion (amortized over a 20-year period) of any airport improvement grant made to the private owner for any purpose other than land acquisition on or after October 1, 1996, plus an amount equal to the federal share of the current fair market value of any land acquired with an airport improvement grant made to that airport on or after October 1, 1996.

3) Certain revenue derived from or generated by mineral extraction, production, lease, or other means at a general aviation airport (as defined at Section 47102 of title 49 United States Code), if the FAA determines the airport sponsor meets the requirements set forth in Sec. 813 of Public Law 112-95.

b. As part of the annual audit required under the Single Audit Act of 1984, the sponsor will direct that the audit will review, and the resulting audit report will provide an opinion concerning, the use of airport revenue and taxes in paragraph (a), and indicating whether funds paid or transferred to the owner or operator are paid or transferred in a manner consistent with Title 49, United States Code and any other applicable provision of law, including any regulation promulgated by the Secretary or Administrator.

c. Any civil penalties or other sanctions will be imposed for violation of this assurance in accordance with the provisions of Section 47107 of Title 49, United States Code.

26. **Reports and Inspections.**

It will:

a. submit to the Secretary such annual or special financial and operations reports as the Secretary may reasonably request and make such reports available to the public; make available to the public at reasonable times and places a report of the airport budget in a format prescribed by the Secretary;

b. for airport development projects, make the airport and all airport records and documents affecting the airport, including deeds, leases, operation and use agreements, regulations and other instruments, available for inspection by any duly authorized agent of the Secretary upon reasonable request;

c. for noise compatibility program projects, make records and documents relating to the project and continued compliance with the terms, conditions, and assurances of this grant agreement including deeds, leases, agreements, regulations, and other instruments, available for inspection by any duly authorized agent of the Secretary upon reasonable request; and

d. in a format and time prescribed by the Secretary, provide to the Secretary and make available to the public following each of its fiscal years, an annual report listing in detail:
   1) all amounts paid by the airport to any other unit of government and the purposes for which each such payment was made; and
   2) all services and property provided by the airport to other units of government and the amount of compensation received for provision of each such service and property.

27. **Use by Government Aircraft.**

It will make available all of the facilities of the airport developed with Federal financial assistance and all those usable for landing and takeoff of aircraft to the United States for use by Government aircraft in common with other aircraft at all times without charge, except, if the use by Government aircraft is substantial, charge may be made for a reasonable share, proportional to such use, for the cost of operating and maintaining the facilities used. Unless otherwise determined by the Secretary, or otherwise agreed to by the sponsor and the using agency, substantial use of an airport by Government aircraft will be considered to exist when operations of such aircraft are in excess of those which, in the opinion of the Secretary, would unduly interfere with use of the landing areas by other authorized aircraft, or during any calendar month that –

a. Five (5) or more Government aircraft are regularly based at the airport or on land adjacent thereto; or

b. The total number of movements (counting each landing as a movement) of Government aircraft is 300 or more, or the gross accumulative weight of Government aircraft using the airport (the total movement of Government aircraft multiplied by gross weights of such aircraft) is in excess of five million pounds.

28. **Land for Federal Facilities.**

It will furnish without cost to the Federal Government for use in connection with any air traffic control or air navigation activities, or weather-reporting and communication activities related to air traffic control, any areas of land or water, or estate therein, or rights in buildings of the sponsor as the Secretary considers necessary or desirable for construction, operation, and maintenance at Federal expense of space or facilities for such purposes. Such areas or any portion thereof will be made available as provided herein within four months after receipt of a written request from the Secretary.

29. **Airport Layout Plan.**

a. Subject to the FAA Reauthorization Act of 2018, Public Law 115-254, Section 163, it will keep up to date at all times an airport layout plan of the airport showing:

1) boundaries of the airport and all proposed additions thereto, together with the boundaries of all offsite areas owned or controlled by the sponsor for airport purposes and proposed additions thereto;

2) the location and nature of all existing and proposed airport facilities and structures (such as runways, taxiways, aprons, terminal buildings, hangars and roads), including all proposed extensions and reductions of existing airport facilities;

3) the location of all existing and proposed non-aviation areas and of all existing improvements thereon; and

4) all proposed and existing access points used to taxi aircraft across the airport's property boundary. Such airport layout plans and each amendment, revision, or modification thereof, shall be subject to the approval of the Secretary which approval shall be evidenced by the signature of a duly authorized representative of the Secretary on the face of the airport layout plan. The sponsor will not make or permit any changes or alterations in the airport or any of its facilities which are not in conformity

with the airport layout plan as approved by the Secretary and which might, in the opinion of the Secretary, adversely affect the safety, utility or efficiency of the airport.

b. Subject to the FAA Reauthorization Act of 2018, Public Law 115-254, Section 163, if a change or alteration in the airport or the facilities is made which the Secretary determines adversely affects the safety, utility, or efficiency of any federally owned, leased, or funded property on or off the airport and which is not in conformity with the airport layout plan as approved by the Secretary, the owner or operator will, if requested, by the Secretary (1) eliminate such adverse effect in a manner approved by the Secretary; or (2) bear all costs of relocating such property (or replacement thereof) to a site acceptable to the Secretary and all costs of restoring such property (or replacement thereof) to the level of safety, utility, efficiency, and cost of operation existing before the unapproved change in the airport or its facilities except in the case of a relocation or replacement of an existing airport facility due to a change in the Secretary's design standards beyond the control of the airport sponsor.

30. **Civil Rights.**

It will promptly take any measures necessary to ensure that no person in the United States shall, on the grounds of race, creed, color, national origin, sex, age, or disability be excluded from participation in, be denied the benefits of, or be otherwise subjected to discrimination in any activity conducted with, or benefiting from, funds received from this grant.

a. Using the definitions of activity, facility and program as found and defined in §§ 21.23 (b) and 21.23 (e) of 49 CFR § 21, the sponsor will facilitate all programs, operate all facilities, or conduct all programs in compliance with all non-discrimination requirements imposed by, or pursuant to these assurances.

b. Applicability

1) Programs and Activities. If the sponsor has received a grant (or other federal assistance) for any of the sponsor's program or activities, these requirements extend to all of the sponsor's programs and activities.

2) Facilities. Where it receives a grant or other federal financial assistance to construct, expand, renovate, remodel, alter or acquire a facility, or part of a facility, the assurance extends to the entire facility and facilities operated in connection therewith.

3) Real Property. Where the sponsor receives a grant or other Federal financial assistance in the form of, or for the acquisition of real property or an interest in real property, the assurance will extend to rights to space on, over, or under such property.

c. Duration.

The sponsor agrees that it is obligated to this assurance for the period during which Federal financial assistance is extended to the program, except where the Federal financial assistance is to provide, or is in the form of, personal property, or real property, or interest therein, or structures or improvements thereon, in which case the assurance obligates the sponsor, or any transferee for the longer of the following periods:

1) So long as the airport is used as an airport, or for another purpose involving the provision of similar services or benefits; or

2) So long as the sponsor retains ownership or possession of the property.

d. Required Solicitation Language. It will include the following notification in all solicitations for bids, Requests For Proposals for work, or material under this grant agreement and in all proposals for agreements, including airport concessions, regardless of funding source:

"The **(Name of Sponsor)**, in accordance with the provisions of Title VI of the Civil Rights Act of 1964 (78 Stat. 252, 42 U.S.C. §§ 2000d to 2000d-4) and the Regulations, hereby notifies all bidders that it will affirmatively ensure that any contract entered into pursuant to this advertisement, disadvantaged business enterprises and airport concession disadvantaged business enterprises will be afforded full and fair opportunity to submit bids in response to this invitation and will not be discriminated against on the grounds of race, color, or national origin in consideration for an award."

e. Required Contract Provisions.

1) It will insert the non-discrimination contract clauses requiring compliance with the acts and regulations relative to non-discrimination in Federally-assisted programs of the DOT, and incorporating the acts and regulations into the contracts by reference in every contract or agreement subject to the non-discrimination in Federally-assisted programs of the DOT acts and regulations.

2) It will include a list of the pertinent non-discrimination authorities in every contract that is subject to the non-discrimination acts and regulations.

3) It will insert non-discrimination contract clauses as a covenant running with the land, in any deed from the United States effecting or recording a transfer of real property, structures, use, or improvements thereon or interest therein to a sponsor.

4) It will insert non-discrimination contract clauses prohibiting discrimination on the basis of race, color, national origin, creed, sex, age, or handicap as a covenant running with the land, in any future deeds, leases, license, permits, or similar instruments entered into by the sponsor with other parties:

a. For the subsequent transfer of real property acquired or improved under the applicable activity, project, or program; and

b. For the construction or use of, or access to, space on, over, or under real property acquired or improved under the applicable activity, project, or program.

f. It will provide for such methods of administration for the program as are found by the Secretary to give reasonable guarantee that it, other recipients, sub-recipients, sub-grantees, contractors, subcontractors, consultants, transferees, successors in interest, and other participants of Federal financial assistance under such program will comply with all requirements imposed or pursuant to the acts, the regulations, and this assurance.

g. It agrees that the United States has a right to seek judicial enforcement with regard to any matter arising under the acts, the regulations, and this assurance.

31. **Disposal of Land.**

a. For land purchased under a grant for airport noise compatibility purposes, including land serving as a noise buffer, it will dispose of the land, when the land is no longer needed for such purposes, at fair market value, at the earliest practicable time. That portion of the proceeds of such disposition which is proportionate to the United States' share of acquisition of such land will be, at the discretion of the Secretary, (1) reinvested in another project at the airport, or (2) transferred to another eligible airport as prescribed by the Secretary. The Secretary shall give preference to the following, in descending order, (1)

reinvestment in an approved noise compatibility project, (2) reinvestment in an approved project that is eligible for grant funding under Section 47117(e) of title 49 United States Code, (3) reinvestment in an approved airport development project that is eligible for grant funding under Sections 47114, 47115, or 47117 of title 49 United States Code, (4) transferred to an eligible sponsor of another public airport to be reinvested in an approved noise compatibility project at that airport, and (5) paid to the Secretary for deposit in the Airport and Airway Trust Fund. If land acquired under a grant for noise compatibility purposes is leased at fair market value and consistent with noise buffering purposes, the lease will not be considered a disposal of the land. Revenues derived from such a lease may be used for an approved airport development project that would otherwise be eligible for grant funding or any permitted use of airport revenue.

b. For land purchased under a grant for airport development purposes (other than noise compatibility), it will, when the land is no longer needed for airport purposes, dispose of such land at fair market value or make available to the Secretary an amount equal to the United States' proportionate share of the fair market value of the land. That portion of the proceeds of such disposition which is proportionate to the United States' share of the cost of acquisition of such land will, (1) upon application to the Secretary, be reinvested or transferred to another eligible airport as prescribed by the Secretary. The Secretary shall give preference to the following, in descending order: (1) reinvestment in an approved noise compatibility project, (2) reinvestment in an approved project that is eligible for grant funding under Section 47117(e) of title 49 United States Code, (3) reinvestment in an approved airport development project that is eligible for grant funding under Sections 47114, 47115, or 47117 of title 49 United States Code, (4) transferred to an eligible sponsor of another public airport to be reinvested in an approved noise compatibility project at that airport, and (5) paid to the Secretary for deposit in the Airport and Airway Trust Fund.

c. Land shall be considered to be needed for airport purposes under this assurance if (1) it may be needed for aeronautical purposes (including runway protection zones) or serve as noise buffer land, and (2) the revenue from interim uses of such land contributes to the financial self-sufficiency of the airport. Further, land purchased with a grant received by an airport operator or owner before December 31, 1987, will be considered to be needed for airport purposes if the Secretary or Federal agency making such grant before December 31, 1987, was notified by the operator or owner of the uses of such land, did not object to such use, and the land continues to be used for that purpose, such use having commenced no later than December 15, 1989.

d. Disposition of such land under (a) (b) or (c) will be subject to the retention or reservation of any interest or right therein necessary to ensure that such land will only be used for purposes which are compatible with noise levels associated with operation of the airport.

32. **Engineering and Design Services.**

Engineering and Design Services. If any phase of such project has received Federal funds under Chapter 471 subchapter 1 of Title 49 U.S.C., it will award each contract, or sub-contract for program management, construction management, planning studies, feasibility studies, architectural services, preliminary engineering, design, engineering, surveying, mapping or related services in the same manner as a contract for architectural and engineering services is negotiated under Chapter 11 of Title 40 U. S. C., or an equivalent qualifications-based requirement prescribed for or by the sponsor of the airport.

33. **Foreign Market Restrictions.**

    It will not allow funds provided under this grant to be used to fund any project which uses any product or service of a foreign country during the period in which such foreign country is listed by the United States Trade Representative as denying fair and equitable market opportunities for products and suppliers of the United States in procurement and construction.

34. **Policies, Standards, and Specifications.**

    It will carry out the project in accordance with policies, standards, and specifications approved by the Secretary including, but not limited to, the advisory circulars listed in the Current FAA Advisory Circulars for AIP projects, dated , and included in this grant, and in accordance with applicable state policies, standards, and specifications approved by the Secretary.

35. **Relocation and Real Property Acquisition.**

    a. It will be guided in acquiring real property, to the greatest extent practicable under State law, by the land acquisition policies in Subpart B of 49 CFR Part 24 and will pay or reimburse property owners for necessary expenses as specified in Subpart B.

    b. It will provide a relocation assistance program offering the services described in Subpart C and fair and reasonable relocation payments and assistance to displaced persons as required in Subpart D and E of 49 CFR Part 24.

    c. It will make available within a reasonable period of time prior to displacement, comparable replacement dwellings to displaced persons in accordance with Subpart E of 49 CFR Part 24.

36. **Access By Intercity Buses.**

    The airport owner or operator will permit, to the maximum extent practicable, intercity buses or other modes of transportation to have access to the airport; however, it has no obligation to fund special facilities for intercity buses or for other modes of transportation.

37. **Disadvantaged Business Enterprises.**

    The sponsor shall not discriminate on the basis of race, color, national origin or sex in the award and performance of any DOT-assisted contract covered by 49 CFR Part 26, or in the award and performance of any concession activity contract covered by 49 CFR Part 23. In addition, the sponsor shall not discriminate on the basis of race, color, national origin or sex in the administration of its Disadvantaged Business Enterprise (DBE) and Airport Concessions Disadvantaged Business Enterprise (ACDBE) programs or the requirements of 49 CFR Parts 23 and 26. The sponsor shall take all necessary and reasonable steps under 49 CFR Parts 23 and 26 to ensure nondiscrimination in the award and administration of DOT-assisted contracts, and/or concession contracts. The sponsor's DBE and ACDBE programs, as required by 49 CFR Parts 26 and 23, and as approved by DOT, are incorporated by reference in this agreement. Implementation of these programs is a legal obligation and failure to carry out its terms shall be treated as a violation of this agreement. Upon notification to the sponsor of its failure to carry out its approved program, the Department may impose sanctions as provided for under Parts 26 and 23 and may, in appropriate cases, refer the matter for enforcement under 18 U.S.C. 1001 and/or the Program Fraud Civil Remedies Act of 1936 (31 U.S.C. 3801).

38. **Hangar Construction.**

    If the airport owner or operator and a person who owns an aircraft agree that a hangar is to be constructed at the airport for the aircraft at the aircraft owner's expense, the airport owner or

operator will grant to the aircraft owner for the hangar a long term lease that is subject to such terms and conditions on the hangar as the airport owner or operator may impose.

39. **Competitive Access.**

    a. If the airport owner or operator of a medium or large hub airport (as defined in section 47102 of title 49, U.S.C.) has been unable to accommodate one or more requests by an air carrier for access to gates or other facilities at that airport in order to allow the air carrier to provide service to the airport or to expand service at the airport, the airport owner or operator shall transmit a report to the Secretary that-

        1) Describes the requests;

        2) Provides an explanation as to why the requests could not be accommodated; and

        3) Provides a time frame within which, if any, the airport will be able to accommodate the requests.

    b. Such report shall be due on either February 1 or August 1 of each year if the airport has been unable to accommodate the request(s) in the six month period prior to the applicable due date.

Exhibit E to Lease

BUILDING SUMMARY

BUILDING P00524

Date(s) of Survey	12/6/91, 3/30/92
Estimated Date of Construction	1961
Building Usage	Maintenance Hangar
Total Gross Square Footage	36,007 Sq. Ft.
Building Type	Concrete Block
Number of Levels	1
Estimated Cost of Recommended Work Items for Asbestos-Containing Materials (CWE)	$0
Total Estimated Cost Including Additive Items (CWE)	$85,982
• Cost per Square Foot Including Additive Items (CWE)	$2.39
Friable Asbestos-Containing Materials	Hot Water Storage Tank Insulation, Pipe Fitting Insulation
Nonfriable Asbestos-Containing Materials	Resilient Floor Tile

WORK ITEM INVENTORY

BLDG./ WORK ITEM	DEI RATING	CONSTR. YEAR	TYPE OF MATERIAL	ESTIMATED QUANTITY	DESCRIPTION LOCATION	FRIABILITY	ACTION	CONTRACTOR COST
P00524 1	12	N/A	Pipe Fitting Insulation	154 E	1st Flr Throughout Floor	Friable	O&M	$0

FINDINGS: Friable asbestos-containing pipe fitting insulation throughout the first floor was in good condition. If this material were to become damaged, asbestos fibers could be distributed to other areas of the building by natural air movement. Most of the insulation is located at or near ceiling height. This material is accessible to building users who enter these areas frequently. [Bulk Sample(s) 30, 32, 34]

RECOMMENDATIONS: Inspect this material annually as part of the O&M. Prohibit any disturbance of this material by maintenance personnel or other building occupants. Should this material be removed, delete this work item from the O&M. Any replacement should be performed with asbestos-free materials.

Additive cost for optional removal and replacement of this material is $7,623.

WORK ITEM INVENTORY

BLDG./ WORK ITEM	DEI RATING	CONSTR. YEAR	TYPE OF MATERIAL	ESTIMATED QUANTITY	DESCRIPTION / LOCATION	FRIABILITY	ACTION	CONTRACTOR COST
P00524 2	12	N/A	Hot Water Storage Tank Insulation	70 SF	1st Flr Boiler Room	Friable	O&M	$0

FINDINGS: Friable asbestos-containing hot water storage tank insulation in the boiler room was in good condition. Although the insulation is accessible and vulnerable to disturbance, this room is infrequently entered by maintenance personnel. Asbestos fibers released from damaged insulation may be distributed to other areas of the building by natural air movement. [Bulk Sample(s) 36, 37, 38]

RECOMMENDATIONS: Inspect this material annually as part of the O&M. Prohibit any disturbance of this material by maintenance personnel or other building occupants. Care should be taken to prevent any water leaks which may loosen the material and cause it to delaminate from the substrate. Should this material be removed, delete this work item from the O&M. Any replacement should be performed with asbestos-free materials.

Additive cost for optional removal and replacement of this material is $3,150.

BLDG./ WORK ITEM	DEI RATING	CONSTR. YEAR	TYPE OF MATERIAL	ESTIMATED QUANTITY	DESCRIPTION / LOCATION	FRIABILITY	ACTION	CONTRACTOR COST
P00524 3	13	N/A	Resilient Floor Tile	5,025 SF	Mezz Throughout	Nonfriable	O&M	$0

FINDINGS: Nonfriable asbestos-containing 9" x 9" beige, 9" x 9" black, 9" x 9" tan and white, 9" x 9" light green, 9" x 9" beige and white, 9" x 9" mint green, 9" x 9" brown and 9" x 9" dark red resilient floor tile throughout most of the mezzanine was in good condition. This material is accessible to building users but does not pose a risk of contamination as long as it does not become damaged or deteriorated in such a way that it could release asbestos fibers into the air. [Bulk Sample(s) 1, 2, 4, 5, 7, 9, 12, 13, 14, 15, 24, 25, 26, 27, 28, 29]

RECOMMENDATIONS: Inspect this material biannually as part of the O&M. Prohibit any disturbance to this material including sanding, chipping or the use of corrosive cleaning chemicals which may cause the generation of airborne asbestos fibers. Should this material be removed, delete this work item from the O&M. Any replacement should be performed with asbestos-free materials.

Additive cost for optional removal and replacement of this material is $55,023.

Exhibit E to Lease

WORK ITEM INVENTORY

BLDG./ WORK ITEM	DEI RATING	CONSTR. YEAR	TYPE OF MATERIAL	ESTIMATED QUANTITY	DESCRIPTION LOCATION	FRIABILITY	ACTION	CONTRACTOR COST

WORK ITEM SUMMARY
BUILDING P00524

The work items are listed below in numerical (and DEI Rating) order, and their estimated costs have been totaled.

P00524 1	12	N/A	Pipe Fitting Insulation	154 E	1st Flr Throughout Floor	Friable	O&M	$0
P00524 2	12	N/A	Hot Water Storage Tank Insulation	70 SF	1st Flr Boiler Room	Friable	O&M	$0
P00524 3	13	N/A	Resilient Floor Tile	5,025 SF	Mezz Throughout	Nonfriable	O&M	$0
								$0

Exhibit E to Lease

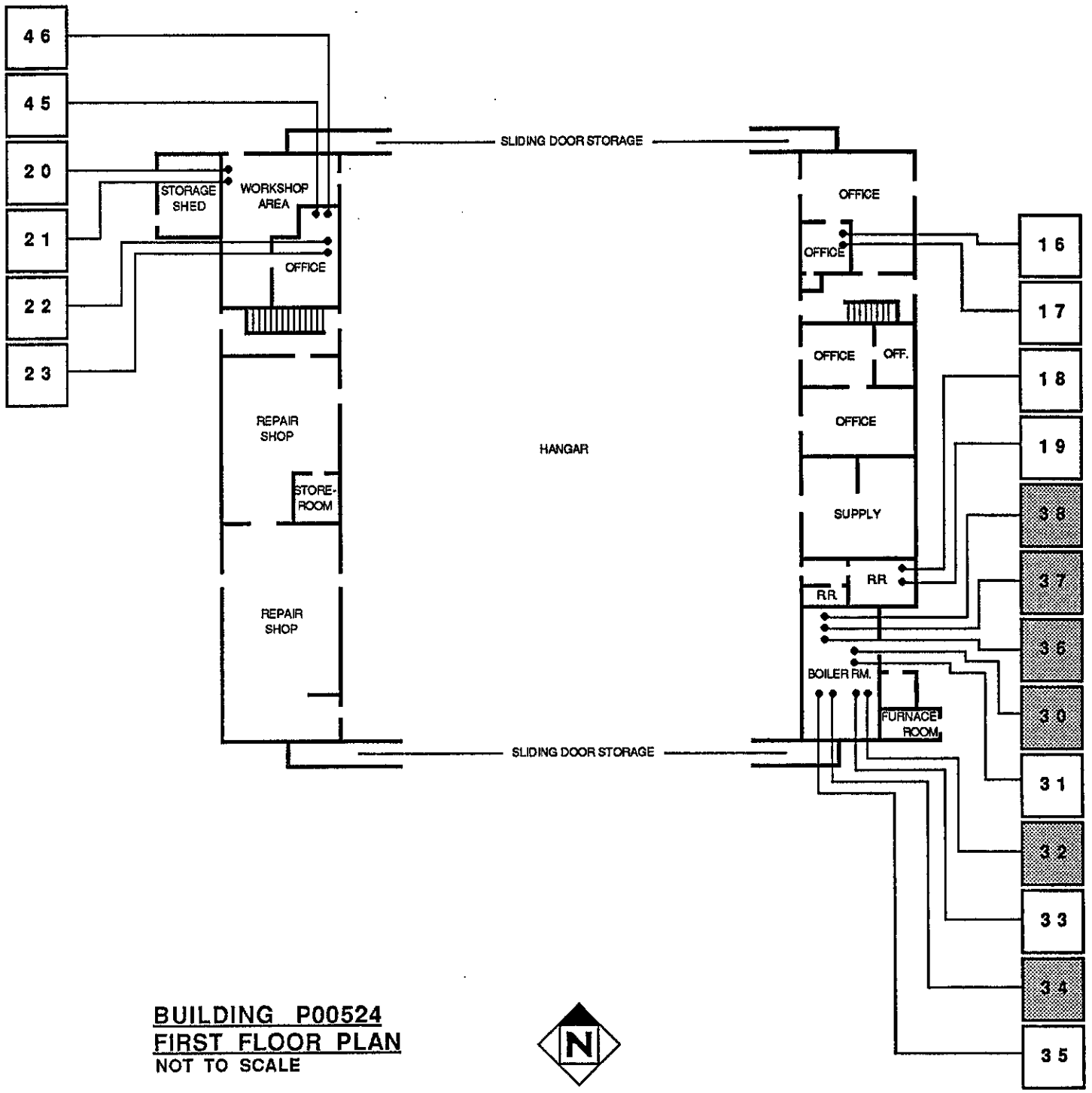

BUILDING P00524
FIRST FLOOR PLAN
NOT TO SCALE

BULK SAMPLE ASBESTOS CONTENT ▒ = > 0.1% □ = NONE DETECTED

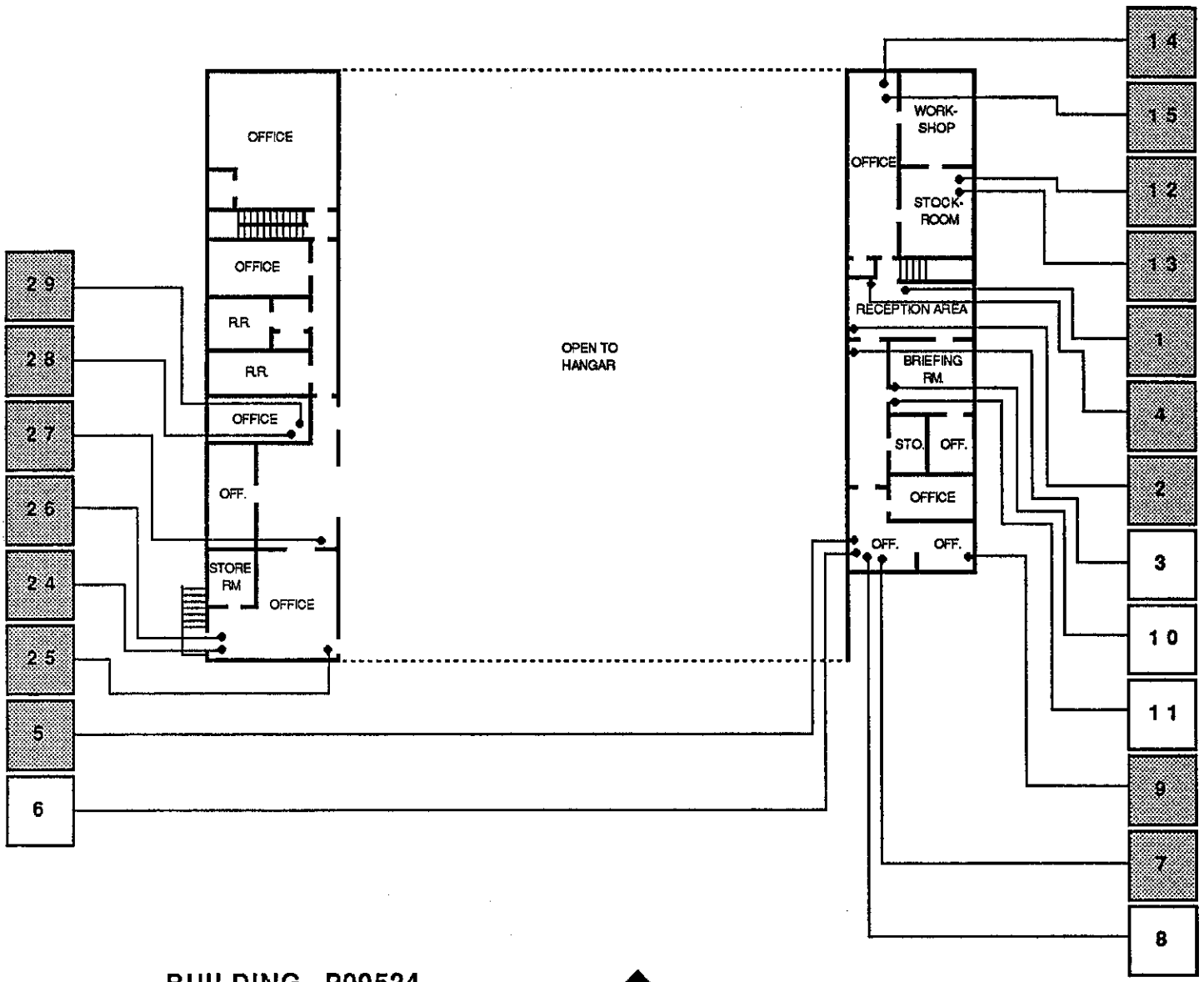

BUILDING P00524
MEZZANINE FLOOR PLAN
NOT TO SCALE

N

BULK SAMPLE ASBESTOS CONTENT ▒ = >0.1% □ = NONE DETECTED

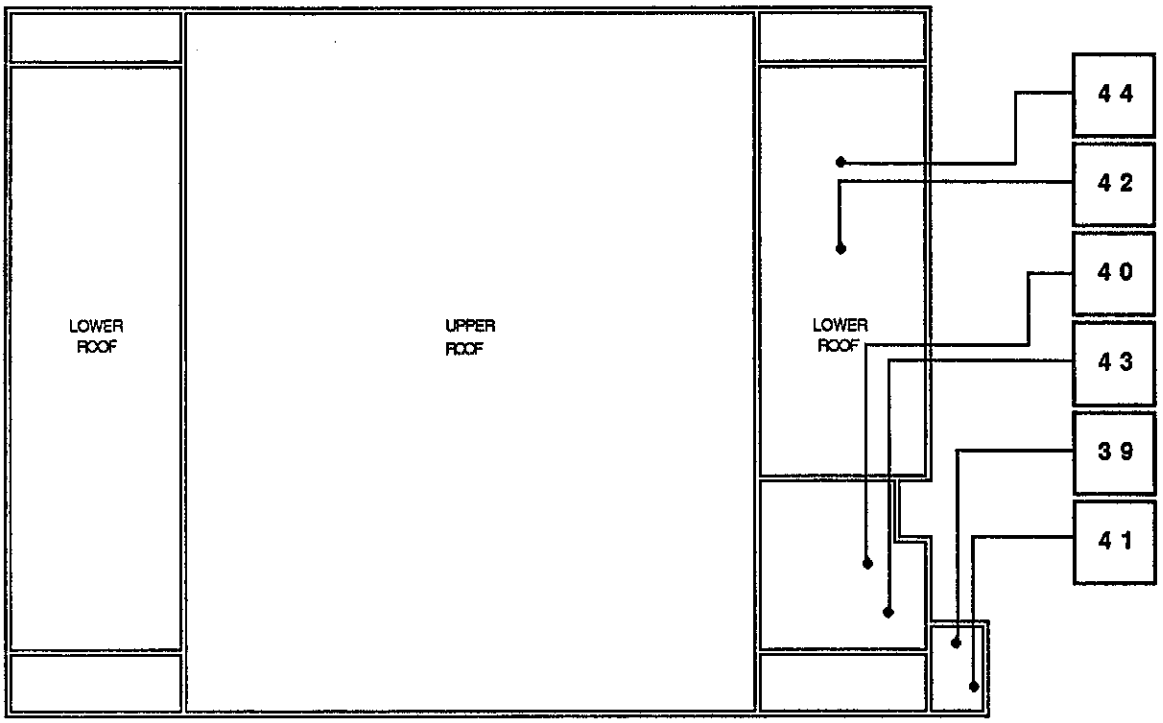

BUILDING P00524
ROOF PLAN
NOT TO SCALE

BULK SAMPLE ASBESTOS CONTENT ▒ = > 0.1% □ = NONE DETECTED

BULK SAMPLE LOG

BUILDING NO.	SAMPLE NO.	TYPE OF MATERIAL	ESTIMATED QUANTITY	FLOOR/ LEVEL	SAMPLE LOCATION	POS./ NEG.	ASBESTOS TYPE	%	FRIABILITY	DAMAGE
P00524	1	Resilient Floor Tile (9" x 9") Beige	1,245 SF	2	Reception Area	P	Chrysotile	3	Nonfriable	None
P00524	2	Resilient Floor Tile (9" x 9") Beige	(R1)	2	Reception Area	P	Chrysotile	3	Nonfriable	None
P00524	3	Floor Tile Mastic Black	5,025 SF	2	Reception Area	N		N/D		
P00524	4	Resilient Floor Tile (9" x 9") Black	625 SF	2	Reception Area	P	Chrysotile	8	Nonfriable	None
P00524	5	Resilient Floor Tile (9" x 9") Black	(R4)	2	Office	P	Chrysotile	8	Nonfriable	None
P00524	6	Floor Tile Mastic Black	(R3)	2	Office	N		N/D		
P00524	7	Resilient Floor Tile (9" x 9") Tan and White	325 SF	2	Office	P	Chrysotile	3	Nonfriable	None
P00524	8	Floor Tile Mastic Black	(R3)	2	Office	N		N/D		
P00524	9	Resilient Floor Tile (9" x 9") Tan and White	(R7)	2	Office	P	Chrysotile	3	Nonfriable	None
P00524	10	Wallboard	5,000 SF	2	Office	N		N/D		
P00524	11	Joint Compound	5,000 SF	2	Office	N		N/D		
P00524	12	Resilient Floor Tile (9" x 9") Light Green	425 SF	2	Stockroom	P	Chrysotile	5	Nonfriable	None
P00524	13	Resilient Floor Tile (9" x 9") Light Green	(R12)	2	Stockroom	P	Chrysotile	5	Nonfriable	None

(R#) denotes that the estimated material quantity for the area has been included in referenced sample number.

BULK SAMPLE LOG

BUILDING NO.	SAMPLE NO.	TYPE OF MATERIAL	ESTIMATED QUANTITY	FLOOR/ LEVEL	SAMPLE LOCATION	POS./ NEG.	ASBESTOS TYPE	%	FRIABILITY	DAMAGE
P00524	14	Resilient Floor Tile (9" x 9") Beige and White	425 SF	2	Office	P	Chrysotile	5	Nonfriable	None
P00524	15	Resilient Floor Tile (9" x 9") Beige and White	(R14)	2	Office	P	Chrysotile	5	Nonfriable	None
P00524	16	Wallboard	(R10)	1	Office	N		N/D		
P00524	17	Joint Compound	(R11)	1	Office	N		N/D		
P00524	18	Resilient Floor Tile (12" x 12") Gray and Brown	275 SF	1	Restroom	N		N/D		
P00524	19	Resilient Floor Tile (12" x 12") Gray and Brown	(R18)	1	Restroom	N		N/D		
P00524	20	Wallboard	(R10)	1	Workshop Area	N		N/D		
P00524	21	Joint Compound	(R11)	1	Workshop Area	N		N/D		
P00524	22	Resilient Floor Tile (12" x 12") White	200 SF	1	Office	N		N/D		
P00524	23	Resilient Floor Tile (12" x 12") White	(R22)	1	Office	N		N/D		
P00524	24	Resilient Floor Tile (9" x 9") Mint Green	800 SF	2	Office	P	Chrysotile	5	Nonfriable	None
P00524	25	Resilient Floor Tile (9" x 9") Mint Green	(R24)	2	Office	P	Chrysotile	5	Nonfriable	None
P00524	26	Resilient Floor Tile (9" x 9") Brown	940 SF	2	Office	P	Chrysotile	5	Nonfriable	None

(R#) denotes that the estimated material quantity for the area has been included in referenced sample number.

BULK SAMPLE LOG

BUILDING NO.	SAMPLE NO.	TYPE OF MATERIAL	ESTIMATED QUANTITY	FLOOR/ LEVEL	SAMPLE LOCATION	POS./ NEG.	ASBESTOS TYPE	%	FRIABILITY	DAMAGE
P00524	27	Resilient Floor Tile (9" x 9") Brown	(R26)	2	Office	P	Chrysotile	5	Nonfriable	None
P00524	28	Resilient Floor Tile (9" x 9") Dark Red	240 SF	2	Office	P	Chrysotile	5	Nonfriable	None
P00524	29	Resilient Floor Tile (9" x 9") Dark Red	(R28)	2	Office	P	Chrysotile	5	Nonfriable	None
P00524	30	Pipe Fitting Insulation (4" O.D.)	154 E	1	Boiler Room	P	Chrysotile	5	Friable	None
P00524	31	Pipe Fitting Insulation Lagging (4" O.D.)	154 E	1	Boiler Room	N		N/D		
P00524	32	Pipe Fitting Insulation (4" O.D.)	(R30)	1	Boiler Room	P	Chrysotile	5	Friable	None
P00524	33	Pipe Fitting Insulation Lagging (4" O.D.)	(R31)	1	Boiler Room	N		N/D		
P00524	34	Pipe Fitting Insulation (4" O.D.)	(R30)	1	Boiler Room	P	Chrysotile	5	Friable	None
P00524	35	Pipe Fitting Insulation Lagging (4" O.D.)	(R31)	1	Boiler Room	N		N/D		
P00524	36	Storage Tank Insulation	70 SF	1	Boiler Room	P	Chrysotile	5	Friable	None
P00524	37	Storage Tank Insulation	(R36)	1	Boiler Room	P	Chrysotile	5	Friable	None
P00524	38	Storage Tank Insulation	(R36)	1	Boiler Room	P	Chrysotile	5	Friable	None
P00524	39	Roofing Composite	32,500 SF	Roof	Lower Roof	N		N/D		

(R#) denotes that the estimated material quantity for the area has been included in referenced sample number.

Exhibit E to Lease

BULK SAMPLE LOG

BUILDING NO.	SAMPLE NO.	TYPE OF MATERIAL	ESTIMATED QUANTITY	FLOOR/ LEVEL	SAMPLE LOCATION	POS./ NEG.	ASBESTOS TYPE	%	FRIABILITY	DAMAGE
P00524	40	Roofing Composite	(R39)	Roof	Lower Roof	N		N/D		
P00524	41	Roof Penetration Mastic	26 E	Roof	Lower Roof	N		N/D		
P00524	42	Roof Penetration Mastic	(R41)	Roof	Lower Roof	N		N/D		
P00524	43	Roofing Mastic	32,500 SF	Roof	Lower Roof	N		N/D		
P00524	44	Roofing Mastic	(R43)	Roof	Lower Roof	N		N/D		
P00524	45	Floor Tile Mastic Black	475 SF	1	Office	N		N/D		
P00524	46	Floor Tile Mastic Black	(R45)	1	Office	N		N/D		

(R#) denotes that the estimated material quantity for the area has been included in referenced sample number.

Exhibit E to Lease

CURRENT WORKING ESTIMATE (CWE)
UNIT COST ESTIMATE SUMMARY

DATE PREPARED: 6/29/92

SHEET 1 OF 2

PROJECT: FORT ORD INSTALLATION BUILDING – P 00524
ASBESTOS MATERIAL ABATEMENT/REPLACEMENT

LOCATION: FORT ORD, CALIFORNIA

ARCHITECT/ ENGINEER: DIAGNOSTIC ENGINEERING INC.

BASIS FOR ESTIMATE

[X] CODE A (NO DESIGN)
[ ] CODE B (PRELIMINARY DESIGN)
[ ] CODE C (FINAL DESIGN)
[ ] OTHER (SPECIFY):

REPORT NO. 1A2141AB001 ESTIMATOR: M. EISSINGER CHECKED BY: L. WERNER

ITEM NO.	DESCRIPTION	RECOMMENDED ACTION	ESTIMATED QUANTITY	UNIT	COST BREAKDOWN	UNIT COST ($)	DIRECT COST ($)
W.I. 1	Pipe Fitting Insulation	O&M	154	E	ABATEMENT	0.00	0
					REPLACEMENT	0.00	0
					ADDITIVE REMOVAL	18.00	2,772
					ADDITIVE REPLACEMENT	15.00	2,310
W.I. 2	Hot Water Storage Tank Insulation	O&M	70	SF	ABATEMENT	0.00	0
					REPLACEMENT	0.00	0
					ADDITIVE REMOVAL	15.00	1,050
					ADDITIVE REPLACEMENT	15.00	1,050
W.I. 3	Resilient Floor Tile	O&M	5,025	SF	ABATEMENT	0.00	0
					REPLACEMENT	0.00	0
					ADDITIVE REMOVAL	3.80	19,095
					ADDITIVE REPLACEMENT	3.50	17,587

ASBESTOS SURVEY REPORT
CORPS OF ENGINEERS – FORT ORD INSTALLATION
BUILDING P00524

CURRENT WORKING ESTIMATE (CWE)
UNIT COST ESTIMATE SUMMARY

DATE PREPARED: 6/29/92 SHEET 2 OF 2

PROJECT: FORT ORD INSTALLATION BUILDING – P 00524
ASBESTOS MATERIAL ABATEMENT/REPLACEMENT

LOCATION: FORT ORD, CALIFORNIA

ARCHITECT/ ENGINEER: DIAGNOSTIC ENGINEERING INC.

BASIS FOR ESTIMATE
[X] CODE A (NO DESIGN)
[ ] CODE B (PRELIMINARY DESIGN)
[ ] CODE C (FINAL DESIGN)
[ ] OTHER (SPECIFY):

REPORT NO. 1A2141AB001 ESTIMATOR: M. EISSINGER CHECKED BY: L. WERNER

COSTS FOR BUILDING P00524 :	DIRECT COST	CONTRACTORS' 50% MARKUP (OVERHEAD, PROFIT, BONDS)	CONTRACTOR COST	
ABATEMENT	$0	$0	$0	
REPLACEMENT	$0	$0	$0	$0
ADDITIVE REMOVAL	$22,917	$11,459	$34,376	
ADDITIVE REPLACEMENT	$20,947	$10,474	$31,421	$65,796

RECOMMENDED ITEMS:

Building P00524 Contractor Cost		$0
INDEPENDENT MONITORING (CONTRACT)	10%	$0
SITE & UTILITIES		$0
Total Contract Cost		$0
Contingencies During Construction	10%	$0
Subtotal		$0
Supervision & Administration	8%	$0
Total Construction		$0
SUB-ALLOTMENT		$0
Total CWE Without Additives		**$0**

ADDITIVE ITEMS:

Building P00524 Additive Contractor Cost		$65,796
INDEPENDENT MONITORING (CONTRACT)	10%	$6,580
Total Additive Contract Cost		$72,376
Contingencies During Construction	10%	$7,238
Subtotal		$79,613
Supervision & Administration	8%	$6,369
Total Additives CWE		**$85,982**
Total CWE Including All Additives		**$85,982**

Exhibit E to Lease

UNIT COST ESTIMATE

DATE PREPARED: 6/29/92

SHEET 1 OF 1

PROJECT: FORT ORD INSTALLATION BUILDING – P 00524
ASBESTOS MATERIAL ABATEMENT

LOCATION: FORT ORD, CALIFORNIA

ARCHITECT/ ENGINEER: DIAGNOSTIC ENGINEERING INC.

BASIS FOR ESTIMATE

[X] CODE A (NO DESIGN)
[ ] CODE B (PRELIMINARY DESIGN)
[ ] CODE C (FINAL DESIGN)
[ ] OTHER (SPECIFY):

REPORT NO. 1A2141AB001 ESTIMATOR: M. EISSINGER CHECKED BY: L. WERNER

ITEM NO.	DESCRIPTION	ACTION	ESTIMATED QUANTITY	UNIT	UNIT COST ($)	DIRECT COST ($)
W.I. 1	Pipe Fitting Insulation	O&M	154	E	0.00	0
W.I. 2	Hot Water Storage Tank Insulation	O&M	70	SF	0.00	0
W.I. 3	Resilient Floor Tile	O&M	5,025	SF	0.00	0

DIRECT COST	$0
CONTRACTORS' 50% MARKUP (OVERHEAD, PROFIT, BONDS)	$0
CONTRACTOR COST – ABATEMENT	$ 0

Exhibit E to Lease

UNIT COST ESTIMATE

DATE PREPARED: 6/29/92

SHEET 1 OF 1

PROJECT: FORT ORD INSTALLATION BUILDING – P 00524
ABATED MATERIAL REPLACEMENT

LOCATION: FORT ORD, CALIFORNIA

ARCHITECT/ ENGINEER: DIAGNOSTIC ENGINEERING INC.

BASIS FOR ESTIMATE

[X] CODE A (NO DESIGN)
[ ] CODE B (PRELIMINARY DESIGN)
[ ] CODE C (FINAL DESIGN)
[ ] OTHER (SPECIFY):

REPORT NO. 1A2141AB001 ESTIMATOR: M. EISSINGER CHECKED BY: L. WERNER

ITEM NO.	DESCRIPTION	ACTION	ESTIMATED QUANTITY	UNIT	UNIT COST ($)	DIRECT COST ($)
W.I. 1	Pipe Fitting Insulation	Replacement	154	E	0.00	0
W.I. 2	Hot Water Storage Tank Insulation	Replacement	70	SF	0.00	0
W.I. 3	Resilient Floor Tile	Replacement	5,025	SF	0.00	0

DIRECT COST	$0
CONTRACTORS' 50% MARKUP (OVERHEAD, PROFIT, BONDS)	$0
CONTRACTOR COST – REPLACEMENT	$ 0

Exhibit E to Lease

UNIT COST ESTIMATE

DATE PREPARED: 6/29/92

SHEET 1 OF 1

PROJECT: FORT ORD INSTALLATION BUILDING - P 00524
ADDITIVE ASBESTOS MATERIAL REMOVAL

LOCATION: FORT ORD, CALIFORNIA

ARCHITECT/ ENGINEER: DIAGNOSTIC ENGINEERING INC.

BASIS FOR ESTIMATE

[X] CODE A (NO DESIGN)
[ ] CODE B (PRELIMINARY DESIGN)
[ ] CODE C (FINAL DESIGN)
[ ] OTHER (SPECIFY): _____

REPORT NO. 1A2141AB001 ESTIMATOR: M. EISSINGER CHECKED BY: L. WERNER

ITEM NO.	DESCRIPTION	ACTION	ESTIMATED QUANTITY	UNIT	UNIT COST ($)	DIRECT COST ($)
W.I. 1	Pipe Fitting Insulation	Additive Removal	154	E	18.00	2,772
W.I. 2	Hot Water Storage Tank Insulation	Additive Removal	70	SF	15.00	1,050
W.I. 3	Resilient Floor Tile	Additive Removal	5,025	SF	3.80	19,095

DIRECT COST	$22,917
CONTRACTORS' 50% MARKUP (OVERHEAD, PROFIT, BONDS)	$11,459
CONTRACTOR COST - ADDITIVE REMOVAL	**$34,376**

Exhibit E to Lease

UNIT COST ESTIMATE

DATE PREPARED: 6/29/92

SHEET 1 OF 1

PROJECT: FORT ORD INSTALLATION BUILDING – P 00524
ADDITIVE ABATED MATERIAL REPLACEMENT

LOCATION: FORT ORD, CALIFORNIA

ARCHITECT/ ENGINEER: DIAGNOSTIC ENGINEERING INC.

BASIS FOR ESTIMATE

[X] CODE A (NO DESIGN)
[ ] CODE B (PRELIMINARY DESIGN)
[ ] CODE C (FINAL DESIGN)
[ ] OTHER (SPECIFY):

REPORT NO. 1A2141AB001 ESTIMATOR: M. EISSINGER CHECKED BY: L WERNER

ITEM NO.	DESCRIPTION	ACTION	ESTIMATED QUANTITY	UNIT	UNIT COST ($)	DIRECT COST ($)
W.I. 1	Pipe Fitting Insulation	Additive Replacement	154	E	15.00	2,310
W.I. 2	Hot Water Storage Tank Insulation	Additive Replacement	70	SF	15.00	1,050
W.I. 3	Resilient Floor Tile	Additive Replacement	5,025	SF	3.50	17,587

DIRECT COST	$20,947
CONTRACTORS' 50% MARKUP (OVERHEAD, PROFIT, BONDS)	$10,474
CONTRACTOR COST – ADDITIVE REPLACEMENT	**$31,421**

February 15, 2023 Item No: **10g(2)**

Honorable Mayor and Members
of the Marina City Council/Airport Commission

City Council Meeting
of February 22, 2023

CITY COUNCIL CONSIDER ADOPTING RESOLUTION NO. 2023-, APPROVING A LEASE AGREEMENT BETWEEN THE CITY OF MARINA AND DISH WIRELESS, LLC FOR THE CELL SITE LOCATED AT 761 NEESON ROAD, BUILDING 524, AT THE MARINA MUNICIPAL AIRPORT, AUTHORIZING FINANCE DIRECTOR TO MAKE NECESSARY ACCOUNTING AND BUDGETARY ENTRIES, AND AUTHORIZING CITY MANAGER TO EXECUTE THE AMENDMENT TO THE LEASE AGREEMENT ON BEHALF OF THE CITY, SUBJECT TO FINAL REVIEW AND APPROVAL BY CITY ATTORNEY

REQUEST:
It is requested that the City Council consider:

1. Adopting Resolution No. 2023-, approving a Lease Agreement between City of Marina and DISH Wireless, LLC., for the cell site located at 761 Neeson Road, Building 524, at the Marina Municipal Airport; and

2. Authorizing Finance Director to make necessary accounting and budgetary entries; and

3. Authorizing City Manager to execute the Amendment to the Lease Agreement on behalf of the City, subject to final review and approval by City Attorney.

BACKGROUND:
In 2000, the City Council approved a lease agreement with Alpine PCS to install a telecommunications tower on the top of Building 524 at the Marina Municipal Airport. The lease had a maximum term of 25 years. This tower was later abandoned and has been unused for approximately 10-years now.

ANALYSIS:
The airport has received a proposal from DISH Wireless, LLC to utilize the existing tower and ground equipment to house their telecommunications equipment. The existing space includes a 260 square foot ground lease area that houses the base equipment and airspace above the south end of the Building 524 roof that supports a tower for the antennae array.

The terms of the proposed lease consist of the following.

New Base Rent	$2,900.00 per month
New Escalation	2.5 % annually
New Initial Term	60 months (5 years)
# of Renewal Terms	4
Total Term	300 months (25 years)

FISCAL IMPACT:

Should the City Council approve this request, anticipated annual rent revenue to the airport will be $34,800 in year 1. Cell site lease revenue is recorded to Airport Operations Fund 555, Land Rents Antenna, Account No. 555.000.000.00-5450.100.

CONCLUSION:

This request is submitted for the City Council/Airport Commission consideration and approval.

Respectfully submitted,

_____

Matt Mogensen
Assistant City Manager
City of Marina

REVIEWED/CONCUR:

_____

Layne Long
City Manager
City of Marina